STUDER Digital Audio Processing
for D940, D941, Madi Router

Schemata / Circuit Diagrams

1. DS-PR Frame
2. Macha Board
3. Optical Madisoni / Coax Madisoni
4. Optical Madisono / Coax Madisono
5. Sommation Summing Board
6. Pap Plus Board
7. D19 M Rack
8. Madi Multiplexer MUX
9. Madi Demultiplexer DEMUX
10. Connectors / Accessories

Prepared and edited by:
Studer Professional Audio AG
Technical Documentation
Althardstrasse 30
CH-8105 Regensdorf - Switzerland

Copyright by Studer Professional Audio AG

Printed in Switzerland
Order no. 10.27.4100 (Ed. 0598)

We reserve the right to make alterations

Studer is a registered trade mark of Studer Professional Audio AG, Regensdorf

Contents of Schemata / Circuit Diagram Sections in Alphabetical Order

		Section
Back Plane	1.940.550.00	7
Block Diagram D19 M SFC Board	1.940.540	8
Block Diagram D19 M Madi Coaxial	1.940.500.20	9
Block Diagram D19 M Mado Coaxial	1.940.520.21	8
Block Diagram Madi Optical	1.940.510.20	9
Block Diagram Mado Optical	1.940.530.21	8
Coax Madisoni 2 Madi Input Board	42.125.303.11	3
Coax Madisono 2 Madi Output Board	42.125.304.11	4
D19 M AESI Board	1.940.580.20	8
D19 M AESO Board	1.940.585.20	9
D19 M C4 AD Board	1.940.560.21	8
D19 M C4 AD NS Board	1.940.561.21	8
D19 M C4 DA Board	1.940.570.20	9
D19 M Rack Bus 5/15	1.940.592.00	7
D19 M SFC Board	1.940.540.22	8
Distribution Amplifier DS-D DA	42.321.201.01	10
- Schema	912.238.35	10
DS-D Frame 1U	42.320.110.81	10
DS-PR Frame	42.125.301.01	1
D19 M Madi Coaxial	1.940.500.20	9
D19 M Mado Coaxial	1.940.520.21	8
Macha Board Synchronisation	42.125.302.01	2
Madi Optical	1.940.510.20	9
Mado Optical	1.940.530.21	8
Optical Madisoni 2 Madi Input Board	42.125.303.01	3
Optical Madisono 2 Madi Output Board	42.125.304.01	4
Pap Plus Board Extended Memory 32k x 8	42.355.278.81	6
Pap Plus Board Extended Memory 128k x 8	42.355.278.80	6
Pap Plus Board Extended Memory	42.355.278.89	6
Power Supply ±15V/3.4A	1.940.602.00	7
Power Supply 5V/20A	1.940.601.00	7
Sommation Summing Board	42.355.152.35	5
Synch Generator DS-D ARG	42.321.401.00	10
- Schema	911.253.51	10
Synchronisation	42.320.110.00	10
Video Clock Input DSD-D VS	42.321.402.01	10

Contents of Schemata / Circuit Diagram Sections in Numerical Order

		Section
1.940.500.20	D19 M Madi Coaxial	9
1.940.500.20	Block Diagram DSD Madi Coaxial	9
1.940.510.20	Madi Optical	9
1.940.510.20	Block Diagram Madi Optical	9
1.940.520.21	D19 M Mado Coaxial	8
1.940.520.21	Block Diagram DSD Mado Coaxial	8
1.940.530.21	Mado Optical	8
1.940.530.21	Block Diagram Mado Optical	8
1.940.540.22	D19 M SFC Board	8
1.940.540	Block Diagram D19 M SFC Board	8
1.940.550.00	Back Plane	7
1.940.560.21	D19 M C4 AD Board	8
1.940.561.21	D19 M C4 AD NS Board	8
1.940.570.20	D19 M C4 DA Board	9
1.940.580.20	D19 M AESI Board	8
1.940.585.20	D19 M AESO Board	9
1.940.592.00	D19 M Rack Bus 5/15	7
1.940.601.00	Power Supply 5V/20A	7
1.940.602.00	Power Supply ±15V/3.4A	7
42.125.301.01	DS-PR Frame	1
42.125.302.01	Macha Board Synchronisation	2
42.125.303.01	Optical Madisoni 2 Madi Input Board	3
42.125.303.11	Coax Madisoni 2 Madi Input Board	3
42.125.304.01	Optical Madisono 2 Madi Output Board	4
42.125.304.11	Coax Madisono 2 Madi Output Board	4
42.320.110.00	Synchronisation	10
42.320.110.81	D19 M Frame 1U	10
42.321.201.01	Distribution Amplifier DS-D DA	10
42.321.401.00	Synch Generator DS-D ARG	10
42.321.402.01	Video Clock Input DSD-D VS	10
42.355.152.35	Sommation Summing Board	5
42.355.278.80	Pap Plus Board Extended Memory 128k x 8	6
42.355.278.81	Pap Plus Board Extended Memory 32k x 8	6
42.355.278.89	Pap Plus Board Extended Memory	6
911.253.51	Block Diagram Synch Generator DS-D ARG	10
912.238.35	Block Diagram Distribution Amplifier DS-D DA	10

SCHEMATA / CIRCUIT DIAGRAMS

DS-PR Frame 42.125.301.01

SCHEMATA / CIRCUIT DIAGRAMS

Macha Board Synchronisation 42.125.302.01

Macha Board Synchronisation 42.125.302.01

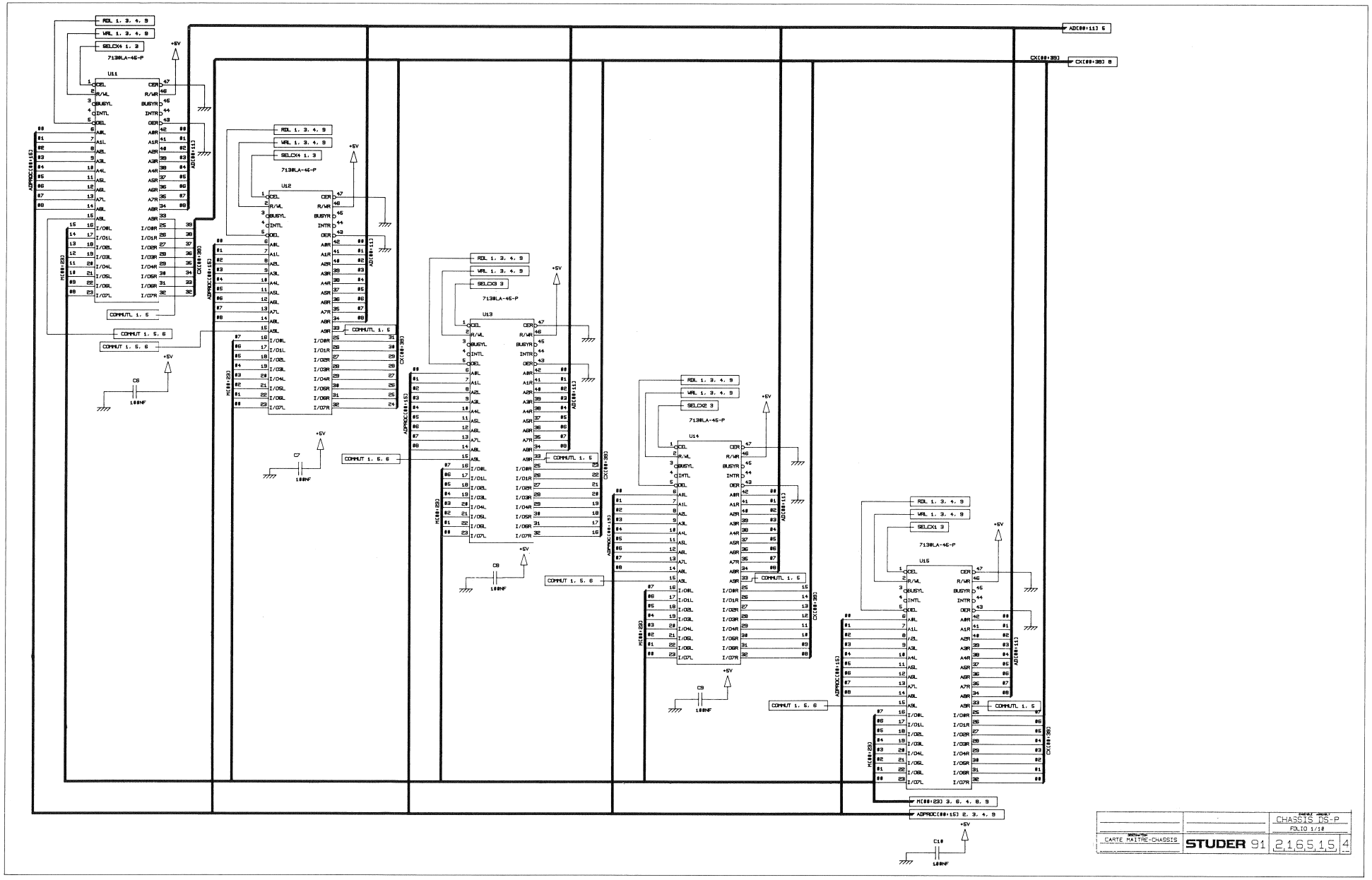

Macha Board Synchronisation 42.125.302.01

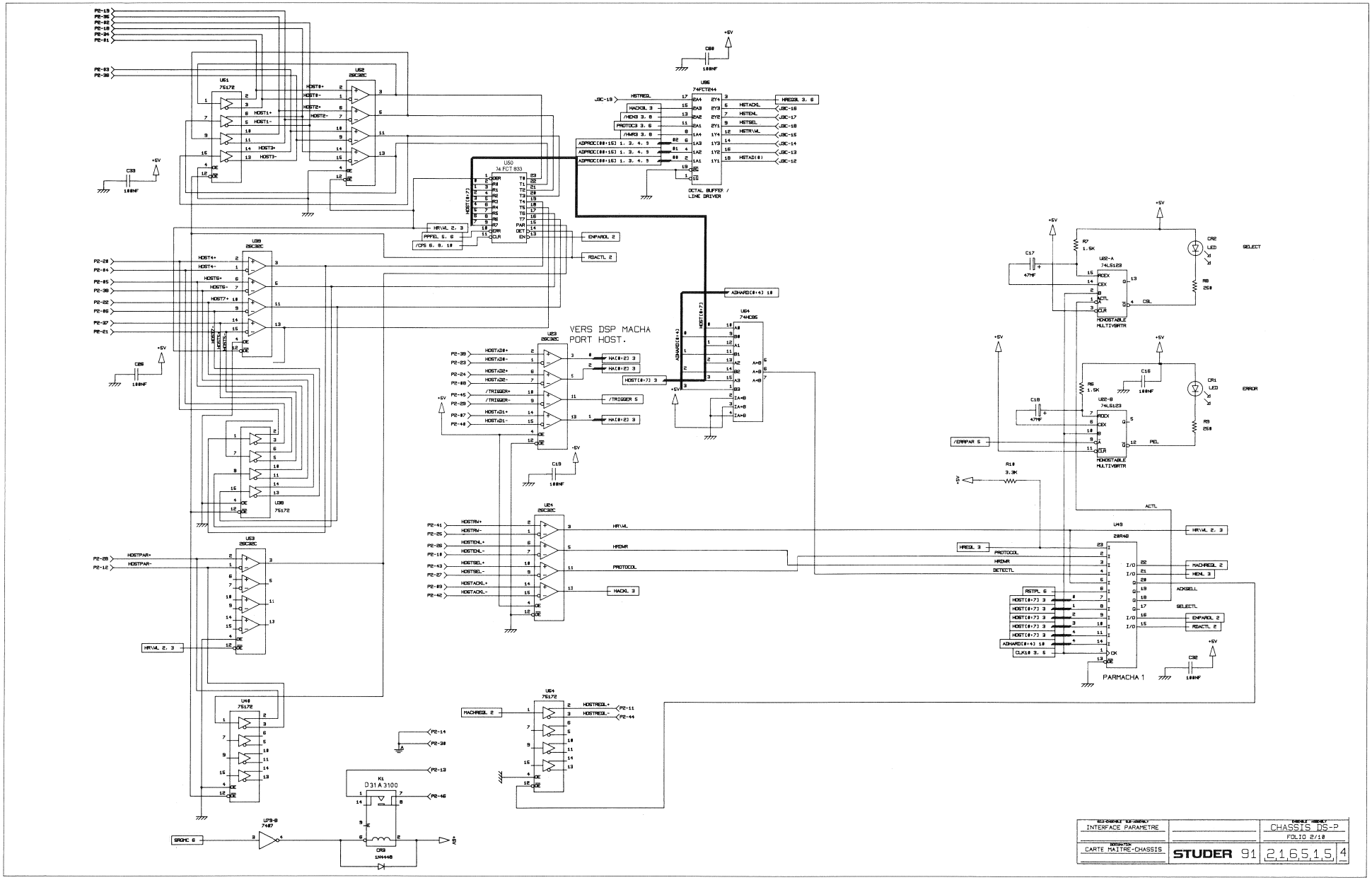

Macha Board Synchronisation 42.125.302.01

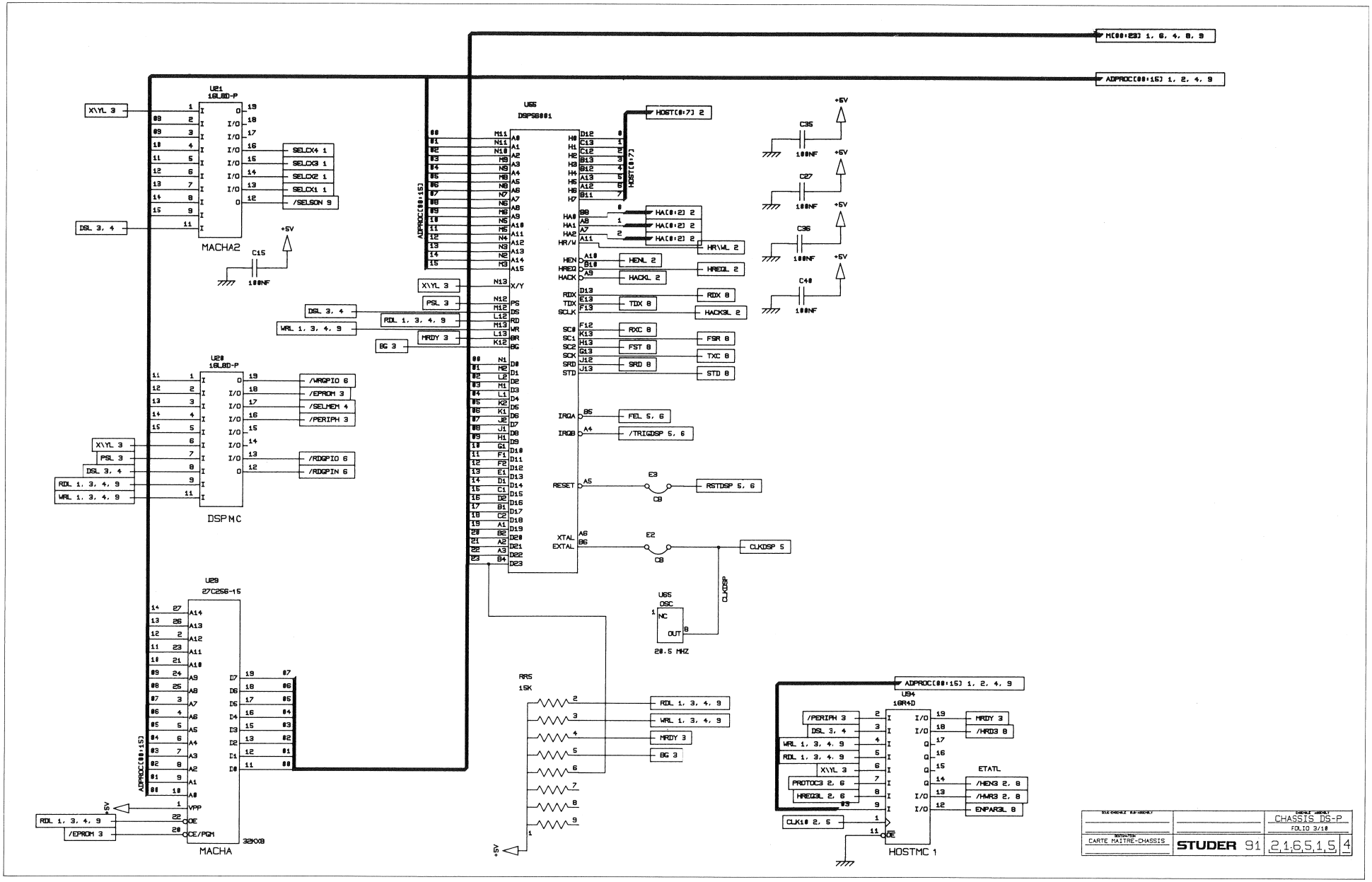

Macha Board Synchronisation 42.125.302.01

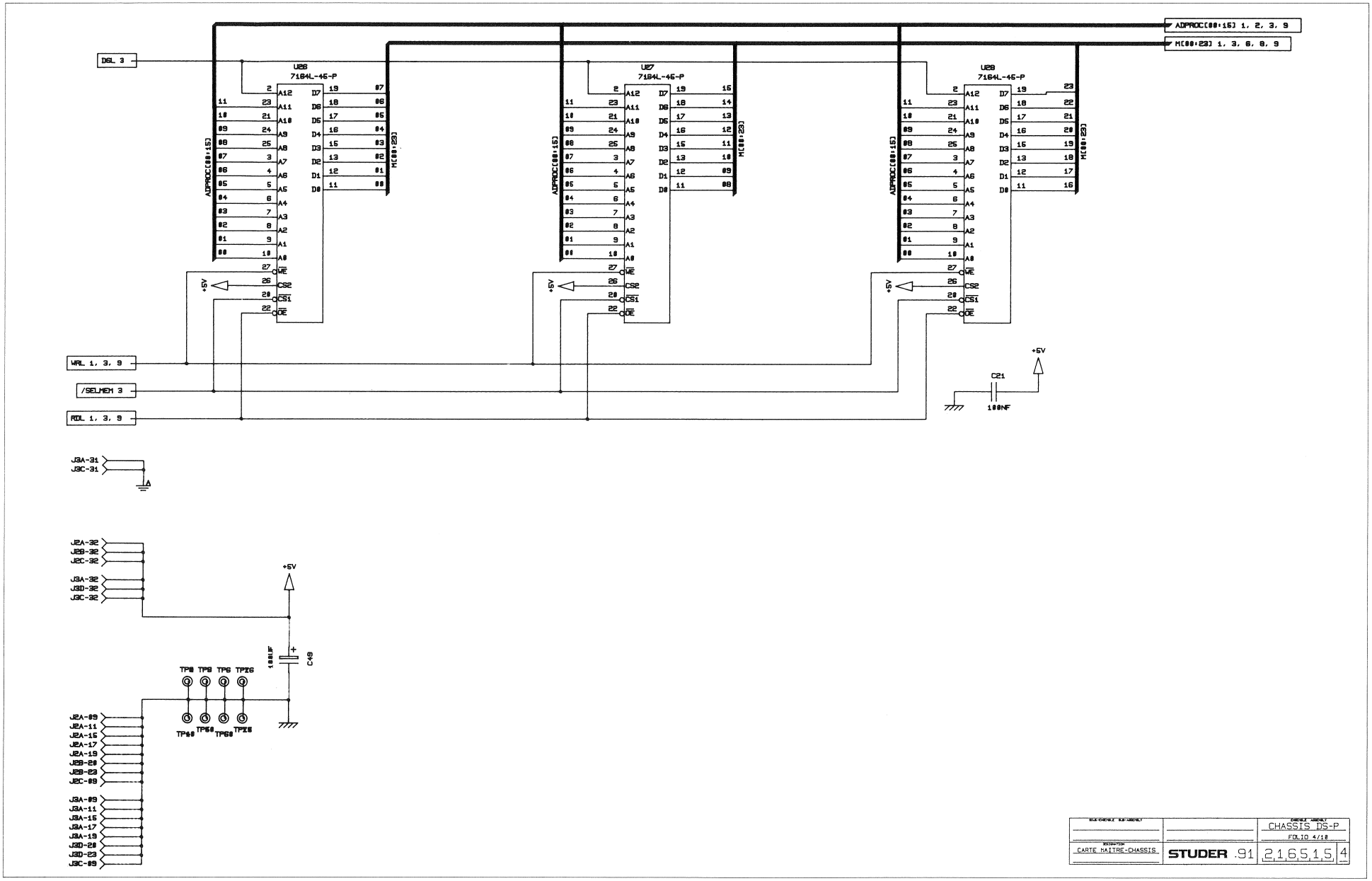

Macha Board Synchronisation 42.125.302.01

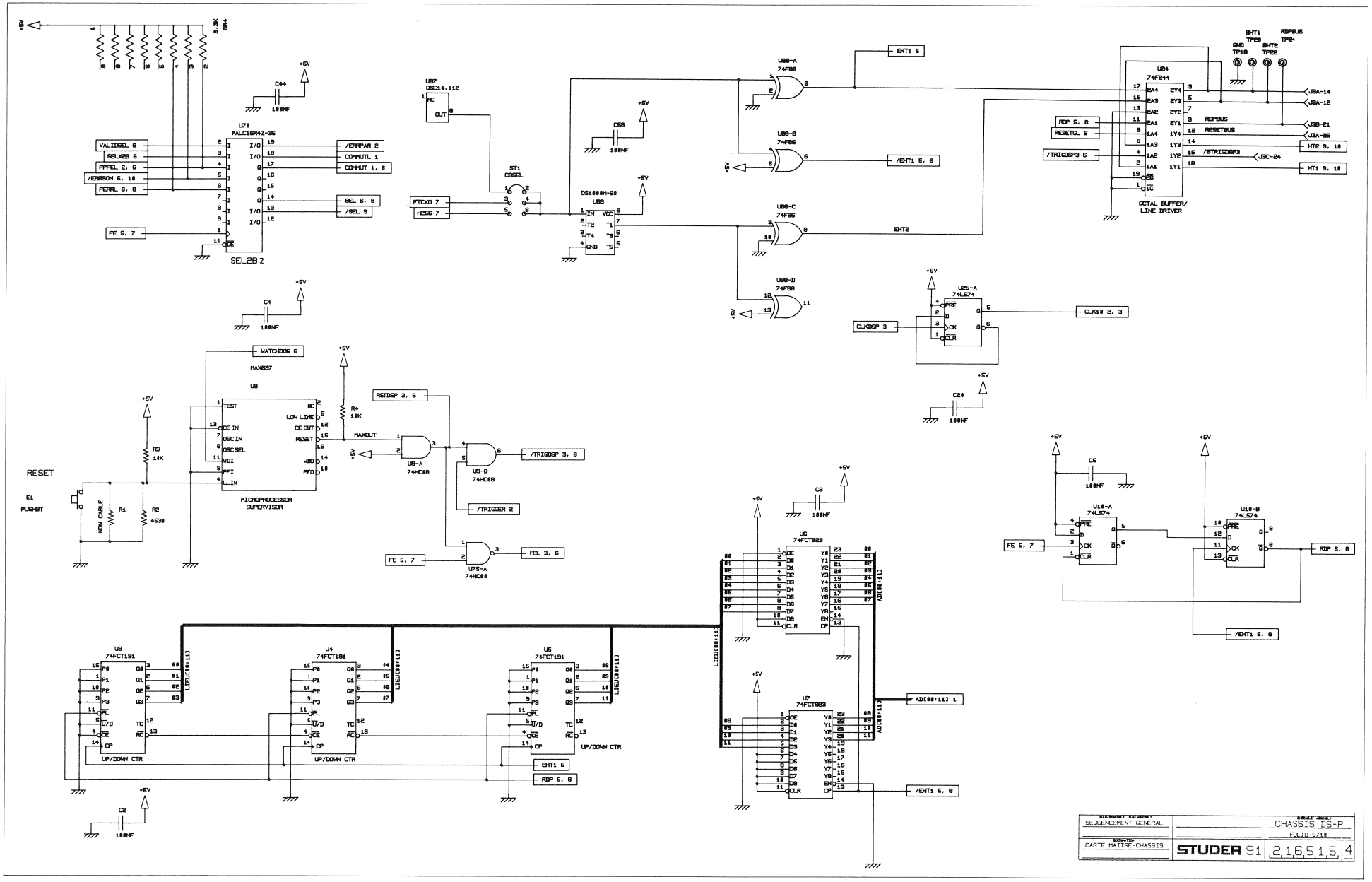

Macha Board Synchronisation 42.125.302.01

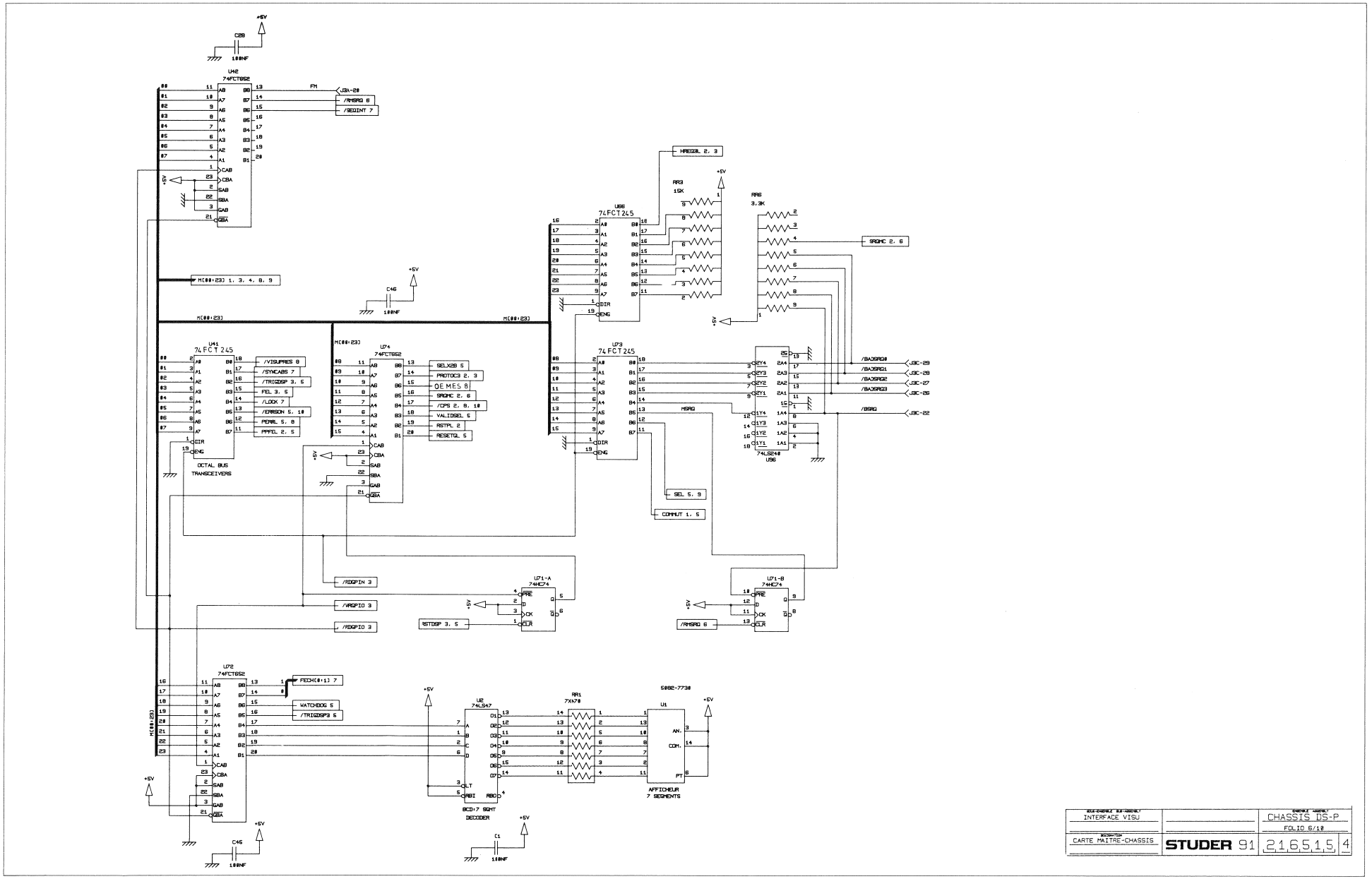

Macha Board Synchronisation 42.125.302.01

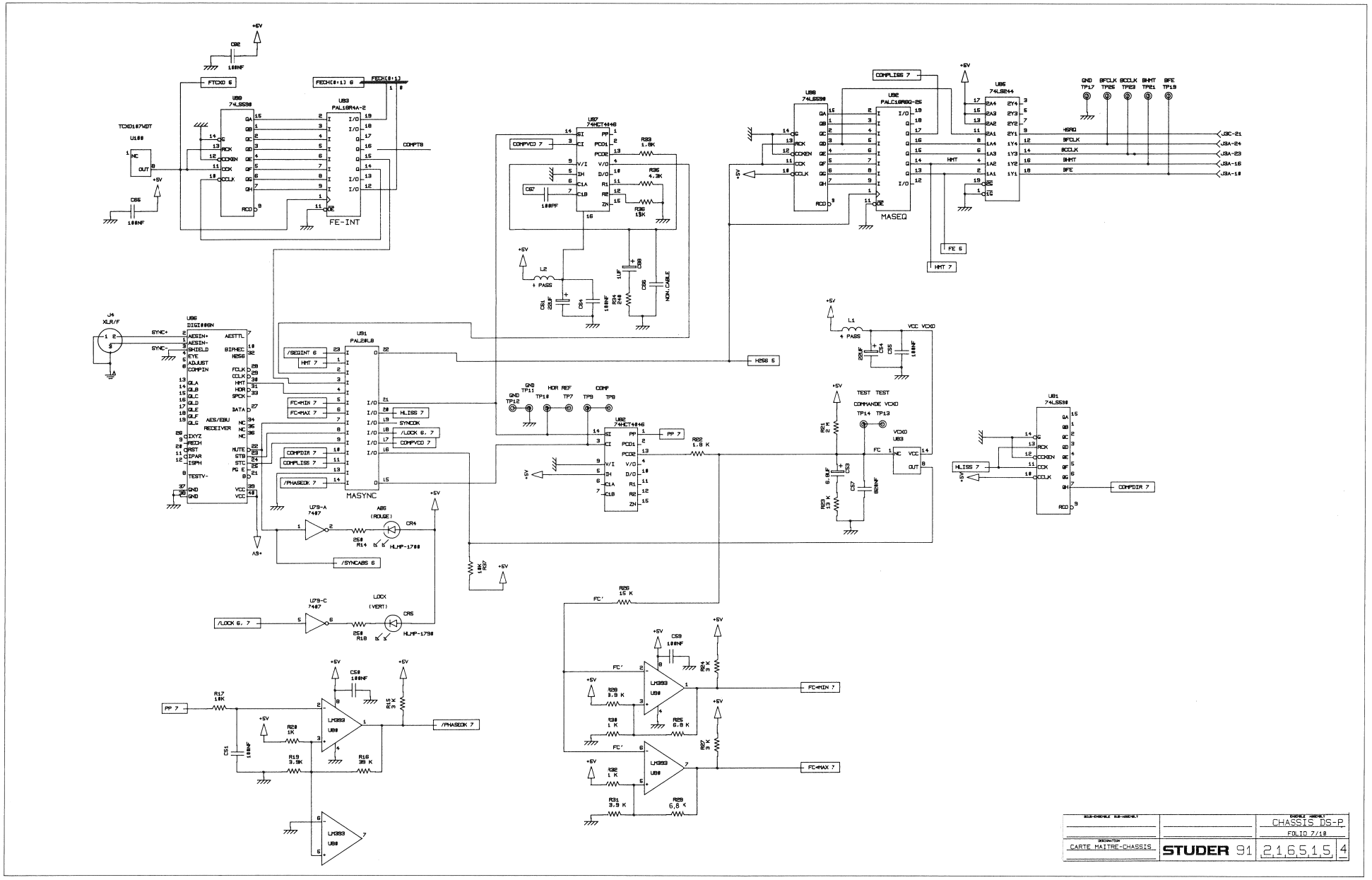

Macha Board Synchronisation 42.125.302.01

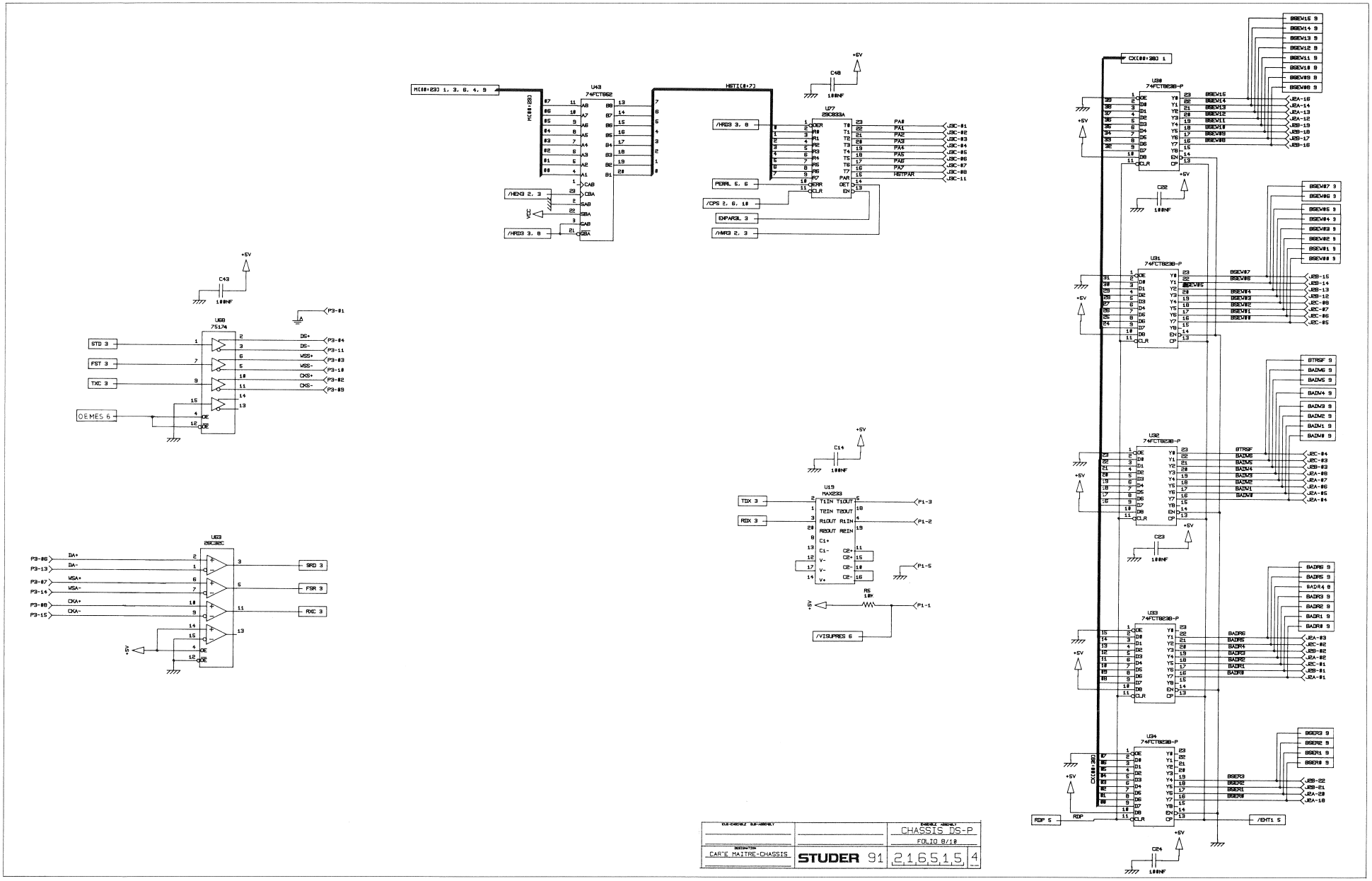

Macha Board Synchronisation 42.125.302.01

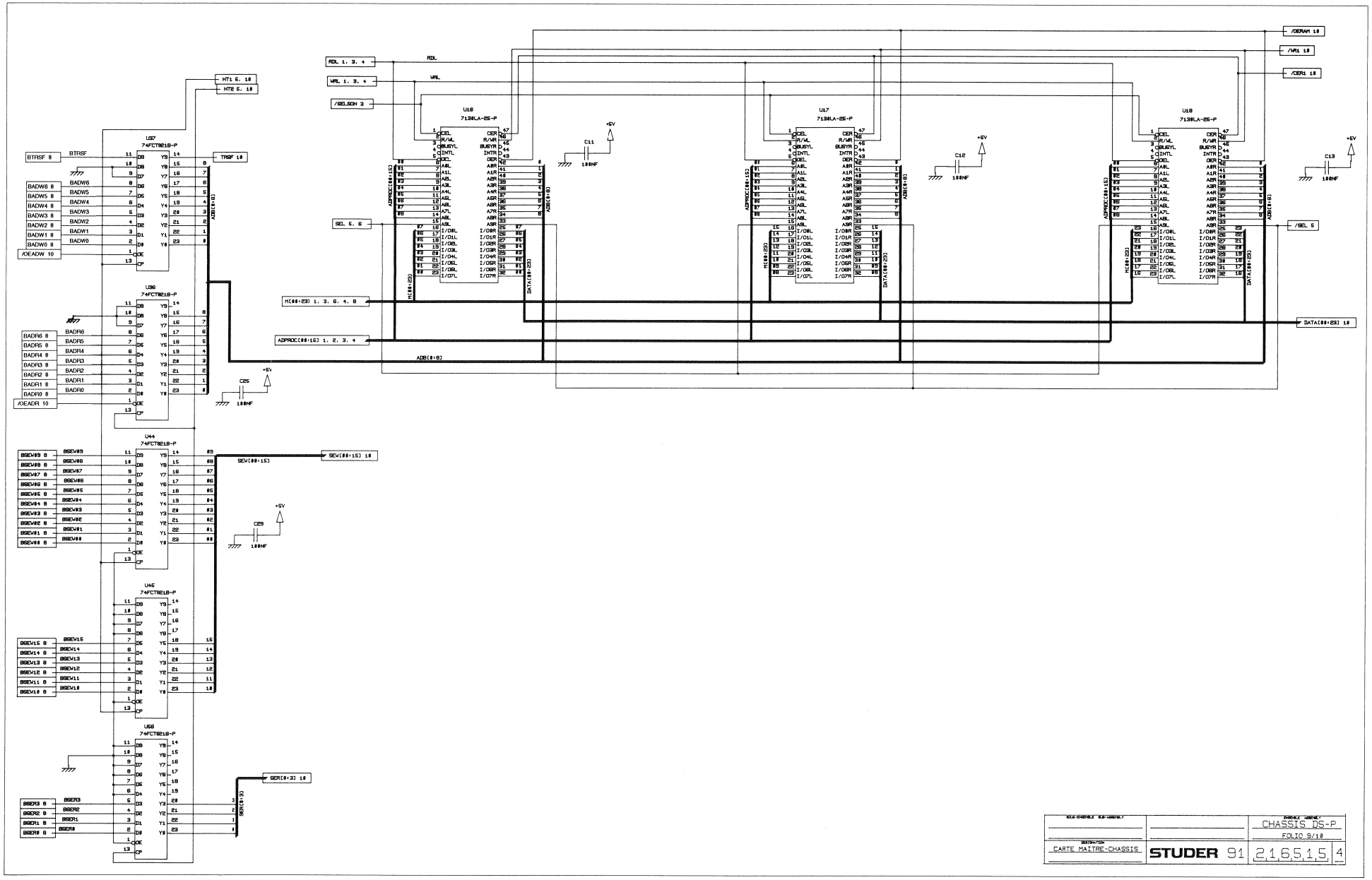

Macha Board Synchronisation 42.125.302.01

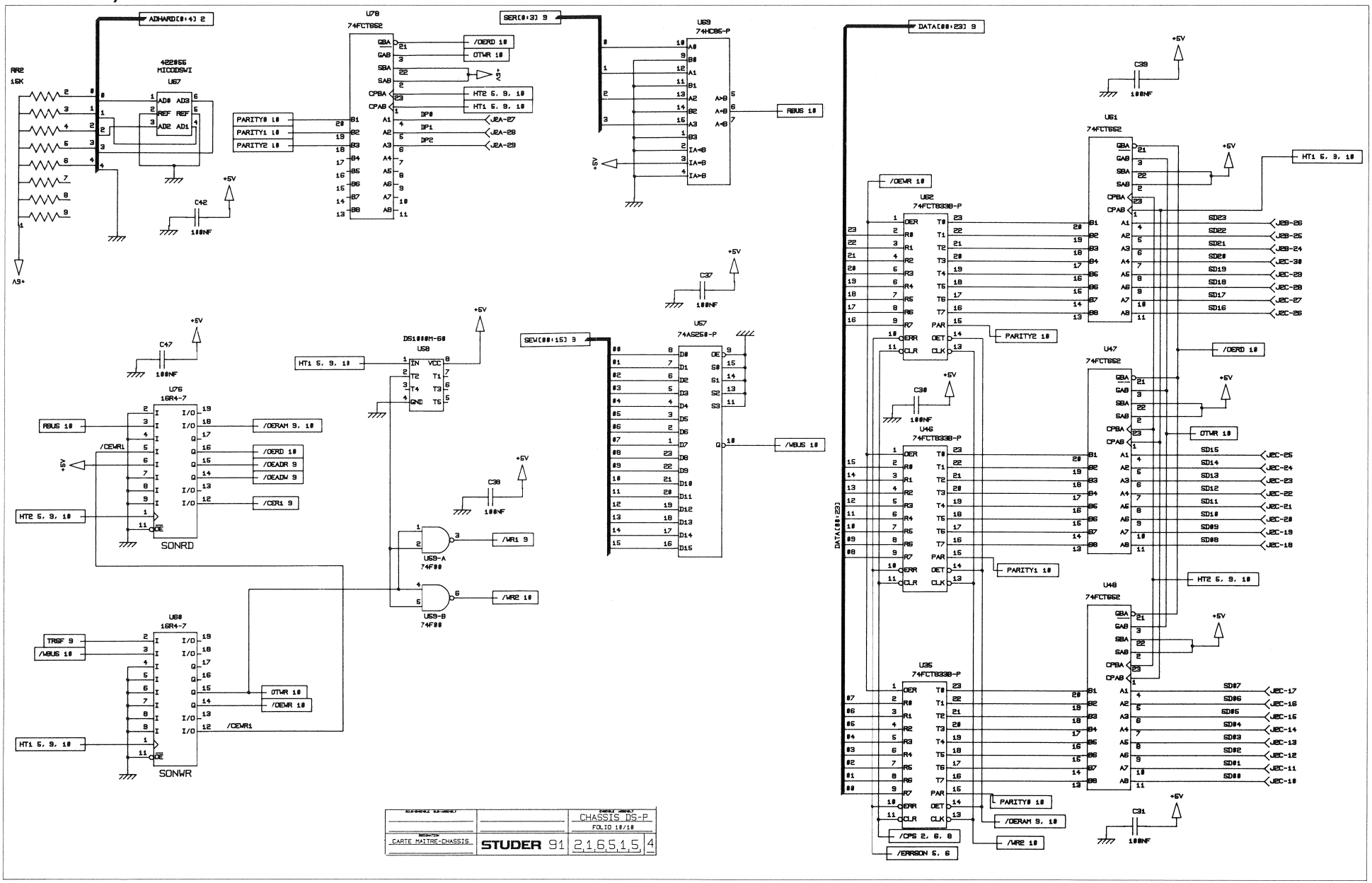

Macha Board Synchronisation 42.125.302.01

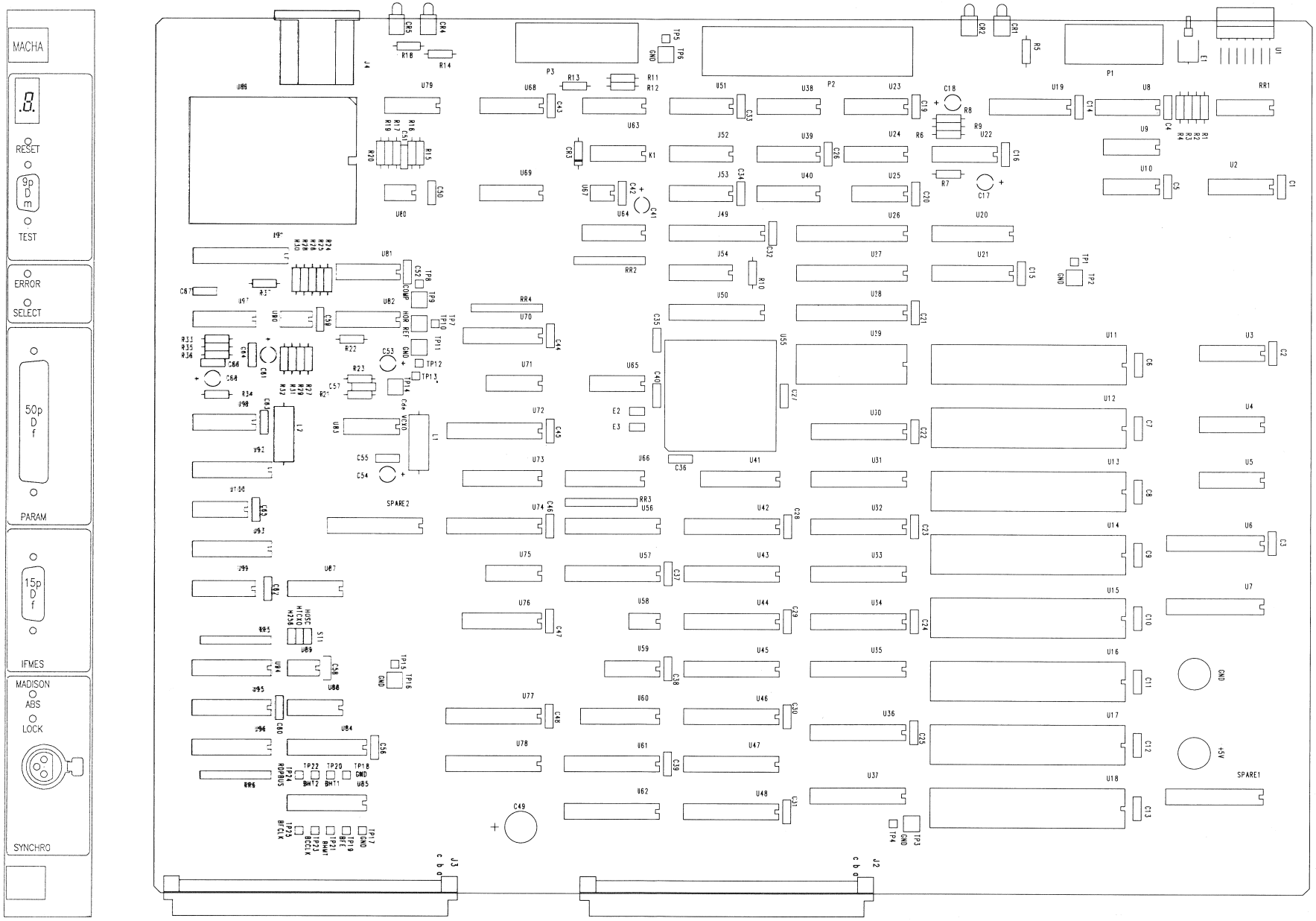

Macha Board Synchronisation 42.125.302.01

REPERE	IND	COMPOSANT	DESIGNATION	QTE	FABRIQUE
A1		91216515	SCHEMA	1	
A2		91216516	FILM CI	1	
A3		30216516	TEST DE CONFORMITE	1	
A4		91216517	FILM DE SERIGRAPHIE	1	
A5		30216517	ECRAN DE SERIGRAPHIE	1	
A6		91216518	FILM DE VERNIS EPARGNE	1	
A7		91114197	PLAN DE FABRICATION	1	
A8		30114197	OUTIL DE FABRICATION	1	
A9		91114219	PLAN DE MONTAGE	1	
A10		91122201	MODIF DE CABLAGE	1	
A11		91114182	FACE AVANT	1	
A12		30114182	OUTILLAGE	1	
A13		91216521	MYLAR SERIGRAPHIE FACE AVANT	1	
A14		30216521	OUTILLAGE	1	
A15		91216525	PLAN DE SERIGRAPHIE FACE AVANT	1	
R1			NON CABLE	1	
R2		95619751	RESISTANCE C109 4,53KOHM	1	
R3		95619784	RESISTANCE C109 10K OHM 1/4W 1%	1	
R4	1	95612139	RESISTANCE C103 4,7K OHM 1/4W 5%	1	
R5		95619784	RESISTANCE C109 10K OHM 1/4W 1%	1	
R6		95612127	RESISTANCE C103 1,5K OHM 1/4W 5%	1	
R7		95612127	RESISTANCE C103 1,5K OHM 1/4W 5%	1	
R8	1	95612123	RESISTANCE C103 1K OHM 1/4W 5%	1	
R9	1	95612123	RESISTANCE C103 1K OHM 1/4W 5%	1	
R10		95612135	RESISTANCE C103 3,3K OHM 1/4W 5%	1	
R11		95612101	RESISTANCE C103 120 OHM 1/4W 5%	1	
R12		95612101	RESISTANCE C103 120 OHM 1/4W 5%	1	
R13		95612101	RESISTANCE C103 120 OHM 1/4W 5%	1	
R14	1	95612123	RESISTANCE C103 1K OHM 1/4W 5%	1	
R15		95612134	RESISTANCE C103 3K OHM 1/4W 5%	1	
R16		95612161	RESISTANCE C103 39K OHM 1/4W 5%	1	
R17		95619784	RESISTANCE C109 10K OHM 1/4W 1%	1	
R18	1	95612123	RESISTANCE C103 1K OHM 1/4W 5%	1	
R19		95612137	RESISTANCE C103 3,9K OHM 1/4W 5%	1	
R20		95612123	RESISTANCE C103 1K OHM 1/4W 5%	1	
R21		95612327	RESISTANCE C106 2M OHM 1/4W 5%	1	
R22		95612129	RESISTANCE C103 1,8K OHM 1/4W 5%	1	
R23		95612150	RESISTANCE C103 13K OHM 1/4W 5%	1	
R24		95612134	RESISTANCE C103 3K OHM 1/4W 5%	1	
R25		95612143	RESISTANCE C103 6,8K OHM 1/4W 5%	1	
R26		95612151	RESISTANCE C103 15K OHM 1/4W 5%	1	
R27		95612134	RESISTANCE C103 3K OHM 1/4W 5%	1	
R28		95612137	RESISTANCE C103 3,9K OHM 1/4W 5%	1	
R29	2	95612143	RESISTANCE C103 6,8K OHM 1/4W 5%	1	
R30		95612123	RESISTANCE C103 1K OHM 1/4W 5%	1	
R31		95612137	RESISTANCE C103 3,9K OHM 1/4W 5%	1	
R32		95612123	RESISTANCE C103 1K OHM 1/4W 5%	1	
R33		95612129	RESISTANCE C103 1,8K OHM 1/4W 5%	1	
R34		95619630	RESISTANCE C109 249 OHM 1/4W 1%	1	
R35		95612138	RESISTANCE C103 4,3K OHM 1/4W 5%	1	
R36	2	95619795	RESISTANCE C109 13K OHM 1/4W 1%	1	
R37	1	95612147	RESISTANCE C103 10K OHM 1/4W 5%	1	
RR1	1	95650012	RESEAU DE RESISTANCE DIP14 7x470 OHM	1	
RR2		95656005	RESEAU DE RESISTANCE SIL 9.8 15K OHM	1	
RR3		95656005	RESEAU DE RESISTANCE SIL 9.8 15K OHM	1	
RR4		95650028	RESEAU DE RESISTANCE SIL 9.8 3,3K OHM	1	
RR5		95656005	RESEAU DE RESISTANCE SIL 9.8 15K OHM	1	
RR6		95650028	RESEAU DE RESISTANCE SIL 9.8 3,3K OHM	1	
C1		95555073	CONDENSATEUR C241 100NF	1	
C2		95555073	CONDENSATEUR C241 100NF	1	
C3		95555073	CONDENSATEUR C241 100NF	1	
C4		95555073	CONDENSATEUR C241 100NF	1	
C5		95555073	CONDENSATEUR C241 100NF	1	
C6		95555073	CONDENSATEUR C241 100NF	1	
C7		95555073	CONDENSATEUR C241 100NF	1	
C8		95555073	CONDENSATEUR C241 100NF	1	
C9		95555073	CONDENSATEUR C241 100NF	1	
C10		95555073	CONDENSATEUR C241 100NF	1	
C11		95555073	CONDENSATEUR C241 100NF	1	
C12		95555073	CONDENSATEUR C241 100NF	1	
C13		95555073	CONDENSATEUR C241 100NF	1	
C14		95555073	CONDENSATEUR C241 100NF	1	
C15		95555073	CONDENSATEUR C241 100NF	1	
C16		95555073	CONDENSATEUR C241 100NF	1	
C17		95560001	CONDENSATEUR RUBYCON 47UF 10V	1	
C18		95560001	CONDENSATEUR RUBYCON 47UF 10V	1	
C19		95555073	CONDENSATEUR C241 100NF	1	
C20		95555073	CONDENSATEUR C241 100NF	1	
C21		95555073	CONDENSATEUR C241 100NF	1	
C22		95555073	CONDENSATEUR C241 100NF	1	
C23		95555073	CONDENSATEUR C241 100NF	1	
C24		95555073	CONDENSATEUR C241 100NF	1	
C25		95555073	CONDENSATEUR C241 100NF	1	
C26		95555073	CONDENSATEUR C241 100NF	1	
C27		95555073	CONDENSATEUR C241 100NF	1	
C28		95555073	CONDENSATEUR C241 100NF	1	
C29		95555073	CONDENSATEUR C241 100NF	1	
C30		95555073	CONDENSATEUR C241 100NF	1	
C31		95555073	CONDENSATEUR C241 100NF	1	
C32		95555073	CONDENSATEUR C241 100NF	1	
C33		95555073	CONDENSATEUR C241 100NF	1	
C34		95555073	CONDENSATEUR C241 100NF	1	
C35		95555073	CONDENSATEUR C241 100NF	1	
C36		95555073	CONDENSATEUR C241 100NF	1	
C37		95555073	CONDENSATEUR C241 100NF	1	
C38		95555073	CONDENSATEUR C241 100NF	1	
C39		95555073	CONDENSATEUR C241 100NF	1	
C40		95555073	CONDENSATEUR C241 100NF	1	
C41			NEANT		
C42		95555073	CONDENSATEUR C241 100NF	1	
C43		95555073	CONDENSATEUR C241 100NF	1	
C44		95555073	CONDENSATEUR C241 100NF	1	
C45		95555073	CONDENSATEUR C241 100NF	1	
C46		95555073	CONDENSATEUR C241 100NF	1	
C47		95555073	CONDENSATEUR C241 100NF	1	
C48		95555073	CONDENSATEUR C241 100NF	1	
C49		95562420	CONDENSATEUR RUBYCON 100UF 25V	1	
C50		95555073	CONDENSATEUR C241 100NF	1	
C51		95555073	CONDENSATEUR C241 100NF	1	
C52		95555073	CONDENSATEUR C241 100NF	1	
C53		95566025	CONDENSATEUR 6,8UF 10V	1	
C54		95562412	CONDENSATEUR RUBYCON 22UF 25V	1	
C55		95555073	CONDENSATEUR C241 100NF	1	
C56		95555073	CONDENSATEUR C241 100NF	1	
C57		95555082	CONDENSATEUR CK06 820NF	1	
C58		95555073	CONDENSATEUR C241 100NF	1	
C59		95555073	CONDENSATEUR C241 100NF	1	
C60		95555073	CONDENSATEUR C241 100NF	1	
C61		95562412	CONDENSATEUR 22UF 25V	1	
C62		95555073	CONDENSATEUR C241 100NF	1	
C63		95555073	CONDENSATEUR C241 100NF	1	
C64		95555073	CONDENSATEUR C241 100NF	1	
C65		95555073	CONDENSATEUR C241 100NF	1	
C66			NON CABLE		
C67		95555012	CONDENSATEUR C241 100PF	1	
C68		95562402	CONDENSATEUR RUBYCON 1UF 50V	1	
U1		95161075	AFFICHEUR 5082-7730	1	H.P
U2		95366001	CIRCUIT INTEGRE 74LS47	1	
U3		95360196	CIRCUIT INTEGRE 74FCT191	1	
U4		95360196	CIRCUIT INTEGRE 74FCT191	1	
U5		95360196	CIRCUIT INTEGRE 74FCT191	1	
U6		95363036	CIRCUIT INTEGRE 74FCT823	1	
U7		95363036	CIRCUIT INTEGRE 74FCT823	1	
U8		95360161	CIRCUIT INTEGRE MAX 697	1	
U9		95363027	CIRCUIT INTEGRE 74HC08	1	
U10		95365000	CIRCUIT INTEGRE 74LS74	1	
U11		95360197	CIRCUIT INTEGRE 7'30LA-45-P	1	
U12		95360197	CIRCUIT INTEGRE 7'30LA-45-P	1	
U13		95360197	CIRCUIT INTEGRE 7'30LA-45-P	1	
U14		95360197	CIRCUIT INTEGRE 7'30LA-45-P	1	
U15		95360197	CIRCUIT INTEGRE 7'30LA-45-P	1	
U16		95360159	CIRCUIT INTEGRE 7'30LA-35-P	1	
U17		95360159	CIRCUIT INTEGRE 7'30LA-35-P	1	
U18		95360159	CIRCUIT INTEGRE 7'30LA-35-P	1	
U19		95360204	CIRCUIT INTEGRE MAX233	1	
U20		95390001	CIRCUIT INTEGRE PAL 16L8D-P	1	
U20	2	00010065	PROGRAMME "DSPMC"	1	
U21		95390001	CIRCUIT INTEGRE PAL 16L8D-P	1	
U21	1	00010053	PROGRAMME "MACHA2"	1	
U22		95360014	CIRCUIT INTEGRE 74LS123	1	
U23		95340017	CIRCUIT INTEGRE 26C32C	1	
U24		95340017	CIRCUIT INTEGRE 26C32C	1	
U25		95365000	CIRCUIT INTEGRE 74LS74	1	
U26		95360207	CIRCUIT INTEGRE 7'64L-45-TP	1	
U27		95360207	CIRCUIT INTEGRE 7'64L-45-TP	1	
U28		95360207	CIRCUIT INTEGRE 7'64L-45-TP	1	
U29	2	95320000	CIRCUIT INTEGRE 27C256-15	1	
U29	1	00010057	PROGRAMME "MACHA"	1	
L30		95363036	CIRCUIT INTEGRE 74FCT823B-P	1	
L31		95363036	CIRCUIT INTEGRE 74FCT823B-P	1	
L32		95363036	CIRCUIT INTEGRE 74FCT823B-P	1	
L33		95363036	CIRCUIT INTEGRE 74FCT823B-P	1	
L34		95363036	CIRCUIT INTEGRE 74FCT823B-P	1	
L35		95360200	CIRCUIT INTEGRE 74FCT833B-P	1	
L36		95360199	CIRCUIT INTEGRE 74FCT821B-P	1	
L37		95360199	CIRCUIT INTEGRE 74FCT821B-P	1	
L38		95360214	CIRCUIT INTEGRE SN75172	1	TEXAS
L39		95340017	CIRCUIT INTEGRE 26C32C	1	
L40		95360214	CIRCUIT INTEGRE SN75172	1	TEXAS
L41	2	95360189	CIRCUIT INTEGRE 74FCT245	1	
L42		95360192	CIRCUIT INTEGRE 74FCT652	1	
L43		95360192	CIRCUIT INTEGRE 74FCT652	1	
L44		95360199	CIRCUIT INTEGRE 74FCT821B-P	1	
L45		95360199	CIRCUIT INTEGRE 74FCT821B-P	1	
L46		95360200	CIRCUIT INTEGRE 74FCT833B-P	1	
L47		95360192	CIRCUIT INTEGRE 74FCT652	1	
L48		95360192	CIRCUIT INTEGRE 74FCT652	1	
L49	1	95360195	CIRCUIT INTEGRE PAL20R4B	1	
L49	2	00010056	PROGRAMME "PARMACH1"	1	
L50		95360073	CIRCUIT INTEGRE 74 FCT 833	1	
L51		95360214	CIRCUIT INTEGRE SN75172	1	TEXAS
L52		95340017	CIRCUIT INTEGRE 26C32C	1	
L53		95340017	CIRCUIT INTEGRE 26C32C	1	
L54		95360214	CIRCUIT INTEGRE SN75172	1	TEXAS
L55		95360216	CIRCUIT INTEGRE DSP56001 RC20	1	
L56		95360199	CIRCUIT INTEGRE 74FCT821B-P	1	
L57		95360201	CIRCUIT INTEGRE 74AS250-P	1	
L58		95360203	CIRCUIT INTEGRE DS1000M-60	1	
L59		95360190	CIRCUIT INTEGRE 74F00	1	
L60		95360202	CIRCUIT INTEGRE PAL16R4-7	1	
L60	1	00010042	PROGRAMME "SONWR"	1	
L61		95360192	CIRCUIT INTEGRE 74FCT652	1	
L62		95360200	CIRCUIT INTEGRE 74FCT833B-P	1	
L63		95340017	CIRCUIT INTEGRE 26C32C	1	
L64		95363023	CIRCUIT INTEGRE 74HC85	1	
L65	2	95010005	OSCILLATEUR 20,5MHz HCMOS TYPE 1129	1	NDK
L66	2	95360189	CIRCUIT INTEGRE 74FCT245	1	
L67		94540008	ROUE CODEUSE 422055	1	T.PROFIL
L68	3m	95340006	CIRCUIT INTEGRE SN75174	1	TEXAS
L69		95363023	CIRCUIT INTEGRE 74HC85	1	
L70	1	95360210	CIRCUIT INTEGRE GAL16V8-35Q	1	
L70	2	00010068	PROGRAMME "SEL28.2" (EN 16R4)	1	
L71		95360050	CIRCUIT INTEGRE 74HC74	1	
L72		95360192	CIRCUIT INTEGRE 74FCT652	1	
L73	2	95360189	CIRCUIT INTEGRE 74FCT245	1	
L74		95360192	CIRCUIT INTEGRE 74FCT652	1	
L75		95363029	CIRCUIT INTEGRE 74HC00	1	
L76		95360202	CIRCUIT INTEGRE PAL16R4-7	1	
L76	1	00010041	PROGRAMME "SONRD"	1	
L77		95360194	CIRCUIT INTEGRE 29CB33A	1	
L78		95360192	CIRCUIT INTEGRE 74FCT652	1	
L79		95332032	CIRCUIT INTEGRE 7407	1	
L80		95332012	CIRCUIT INTEGRE LM393	1	
L81		95360179	CIRCUIT INTEGRE 74LS590	1	
L82		95360059	CIRCUIT INTEGRE 74HCT4046	1	
L83			NEANT (OPTION:C I VCXO 12,288 MHz)	1	
L84	1	95363037	CIRCUIT INTEGRE 74F244	1	
L85		95366000	CIRCUIT INTEGRE 74LS244	1	
L86		51550005	CIRCUIT INTEGRE DIGI006N	1	
L87	1	95360232	OSCILLATEUR 13,3MHz NCH080 C	1	SARONIX
L88		95360219	CIRCUIT INTEGRE 74F86	1	
L89		95360203	CIRCUIT INTEGRE DS1000M-60	1	
L90		95332012	CIRCUIT INTEGRE LM393	1	
L91		95340014	CIRCUIT INTEGRE PAL20L8	1	
L91	1	00010051	PROGRAMME "MASYNC"	1	
L92		95390018	CIRCUIT INTEGRE PAL16R6Q-25	1	
L92	1	00010052	PROGRAMME "MASEQ"	1	
L93		95390008	CIRCUIT INTEGRE PAL16R4A2	1	
L93	1	00010050	PROGRAMME "FE-INT"	1	
L94		95390003	CIRCUIT INTEGRE PAL16R4-D-P	1	
L94	2	00010067	PROGRAMME "HOSTMC.1"	1	
L95		95360175	CIRCUIT INTEGRE 74FCT244	1	
L96		95363065	CIRCUIT INTEGRE 74LS240	1	
L97		95360039	CIRCUIT INTEGRE 74HCT4046	1	
L98		95360179	CIRCUIT INTEGRE 74LS590	1	
L99		95360179	CIRCUIT INTEGRE 74LS590	1	
L100		95300011	CIRCUIT INTEGRE TXD107WDT TCXO 14,112MHz	1	
J1			NEANT		
J2		94410049	DIN41612.8609.396-71-13-755000-E1	1	SOURIAU
J3		94410049	DIN41612.8609.396-71-13-755000-E1	1	SOURIAU
J4		94410020	XLB-3-31-PCV	1	ITT
X2		97659810	VIS TAP-TIP M2,5	2	
P1		94480021	CONNECTEUR REF: ZEDE 111979-011	1	ITT
P2		94420160	CONNECTEUR DD50S864	1	SOURIAU
X3		94420161	VERROUILLAGE (1 PAIRE)609-008-50	1	ANSLEY
X1		94420167	CONNECTEUR 622-50PM1	1	ANSLEY
X6		94420165	VERROUILLAGE A GLISSIERE 609-50LS	1	ANSLEY
P3		94480022	CONNECTEUR REF: ZEDA 111978-111	1	ITT
X4		94480023	VERROUILLAGE REF: 8630-01-060	4	SOURIAU
TP1		94450009	REPARTITEUR MINI W 385-0358-1-40-400	0.03	COMATEL
TP2		94340603	PLOT LOUPOT E184/5	1	
TP3		94340603	PLOT LOUPOT E184/5	1	
TP4		94450009	REPARTITEUR MINI W 385-0358-1-40-400	0.03	COMATEL
TP5		94450009	REPARTITEUR MINI W 385-0358-1-40-400	0.03	COMATEL
TP6		94340603	PLOT LOUPOT E184/5	1	
TP7		94450009	REPARTITEUR MINI W 385-0358-1-40-400	0.03	COMATEL
TP8		94450009	REPARTITEUR MINI W 385-0358-1-40-400	0.03	COMATEL
TP9		94340603	PLOT LOUPOT E184/5	1	
TP10		94340603	PLOT LOUPOT E184/5	1	
TP11		94340603	PLOT LOUPOT E184/5	1	
TP12		94450009	REPARTITEUR MINI W 385-0358-1-40-400	0.03	COMATEL
TP13		94450009	REPARTITEUR MINI W 385-0358-1-40-400	0.03	COMATEL
TP14		94340603	PLOT LOUPOT E184/5	1	
TP15		94450009	REPARTITEUR MINI W 385-0358-1-40-400	0.03	COMATEL
TP16		94340603	PLOT LOUPOT E184/5	1	
TP17		94450009	REPARTITEUR MINI W 385-0358-1-40-400	0.03	COMATEL
TP18		94450009	REPARTITEUR MINI W 385-0358-1-40-400	0.03	COMATEL
TP19		94450009	REPARTITEUR MINI W 385-0358-1-40-400	0.03	COMATEL
TP20		94450009	REPARTITEUR MINI W 385-0358-1-40-400	0.03	COMATEL
TP21		94450009	REPARTITEUR MINI W 385-0358-1-40-400	0.03	COMATEL
TP22		94450009	REPARTITEUR MINI W 385-0358-1-40-400	0.03	COMATEL
TP23		94450009	REPARTITEUR MINI W 385-0358-1-40-400	0.03	COMATEL
TP24		94450009	REPARTITEUR MINI W 385-0358-1-40-400	0.03	COMATEL
TP25		94450009	REPARTITEUR MINI W 385-0358-1-40-400	0.03	COMATEL
L1		95450004	SELF 4-PASS 830 10mm GT4 1x2x10	1	FERRINOX
K1	2	94643013	RELAIS D31A3100	1	CELDUC
L2		95450004	SELF 4-PASS 830 10mm GT4 1x2x10	1	FERRINOX
CR1		95163000	DIODE ELECTRO HLMP 1700 ROUGE	1	H.P
CR2		95163002	DIODE ELECTRO HLMP 1790 VERT	1	H.P
CR3		95222854	DIODE 1N4448	1	
CR4		95163000	DIODE ELECTRE HLMP 1700 ROUGE	1	H.P
CR5		95163002	DIODE ELECTRO HLMP 1790 VERT	1	H.P
E1		94563003	BOUTON POUSSOIR 9233WWCD	1	APR
X5		94320003	CAVALIER 313-1731-0-00-406	3	COMATEL
X7		94480300	SUPPORT POUR C.I 6PTS	1	
X8		94480301	SUPPORT POUR C.I 8PTS	4	
X9		94480302	SUPPORT POUR C.I 14PTS	14	
X10		94480304	SUPPORT POUR C.I COUDE 14PTS A14-LED-H	1	ANTELEC
X11		94480303	SUPPORT POUR C.I 16PTS	24	
X12		94480305	SUPPORT POUR C.I 20PTS ETROIT	16	
X13		94480313	SUPPORT POUR C.I 24PTS	30	
X14		94480316	SUPPORT POUR C.I 28PTS ETROIT	3	
X15		94480308	SUPPORT POUR C.I 28PTS LARGE	1	
X16		94480311	SUPPORT POUR C.I 48PTS	8	
X17		94480019	SUPPORT POUR C.I PGA88 PGA-088-CH3-S-TG	1	
X18		94320034	REPARTITEUR COM-DIP 341-0799-1-20-40-0	2	COMATEL
ST1		94450009	REPARTITEUR MINI W 385-0358-1-40-400	0.15	COMATEL
X19		91316870	RAIDISSEUR 316870	1	
X20		97880003	ENTRETOISE EXALIS4 LONG.5mm	6	ACCEL
X21		97880004	ENTRETOISE ENLIS2 LONG.6mm	2	ACCEL
X22	1	91815597	VIS M2,5x14mm	6	
X23		98230043	POIGNEE EXTRACTEUR HAUTE 131177	0.5	SEEM
X24		98230044	POIGNEE EXTRACTEUR BASSE 131178	0.5	SEEM
X25	1	97613203	VIS V106 F/90 M2,5x6	2	
X26	1	97612202	VIS V126 M2,5x5	2	
X27	1	97612205	VIS V126 M2,5x8	2	
X28	1	97715007	RONDELLE V151 MU 2,5	2	
X29		91815561	MYLAR ETIQ. POIGNEE REP.D	1	
X30		30815561	OUTILLAGE	1	
X31		91815595	PLAN DE SERIG. ETIQ. POIGNEE	1	
X32		98230045	OEILLET + VIS 492959	0.02	SEEM
X33		91815505	ETIQUETTE DE REPERAGE	1	
X34		94330007	SUPPORT AST 0035-9660	4	SHURTER
E2		94450009	REPARTITEUR MINI W 385-0358-1-40-400	0.05	COMATEL
E3		94450009	REPARTITEUR MINI W 385-0358-1-40-400	0.05	COMATEL
X35	1	94450009	REPARTITEUR COM-DIP 341-0799-1-21-40-0	1.91	COMATEL

SCHEMATA / CIRCUIT DIAGRAMS

Optical Madisoni 2 Madi Input Board 42.125.303.01

Coax Madisoni 2 Madi Input Board 42.125.303.11

Optical Madisoni 2 Madi Input Board 42.125.303.01
Coax Madisoni 2 Madi Input Board 42.125.303.11

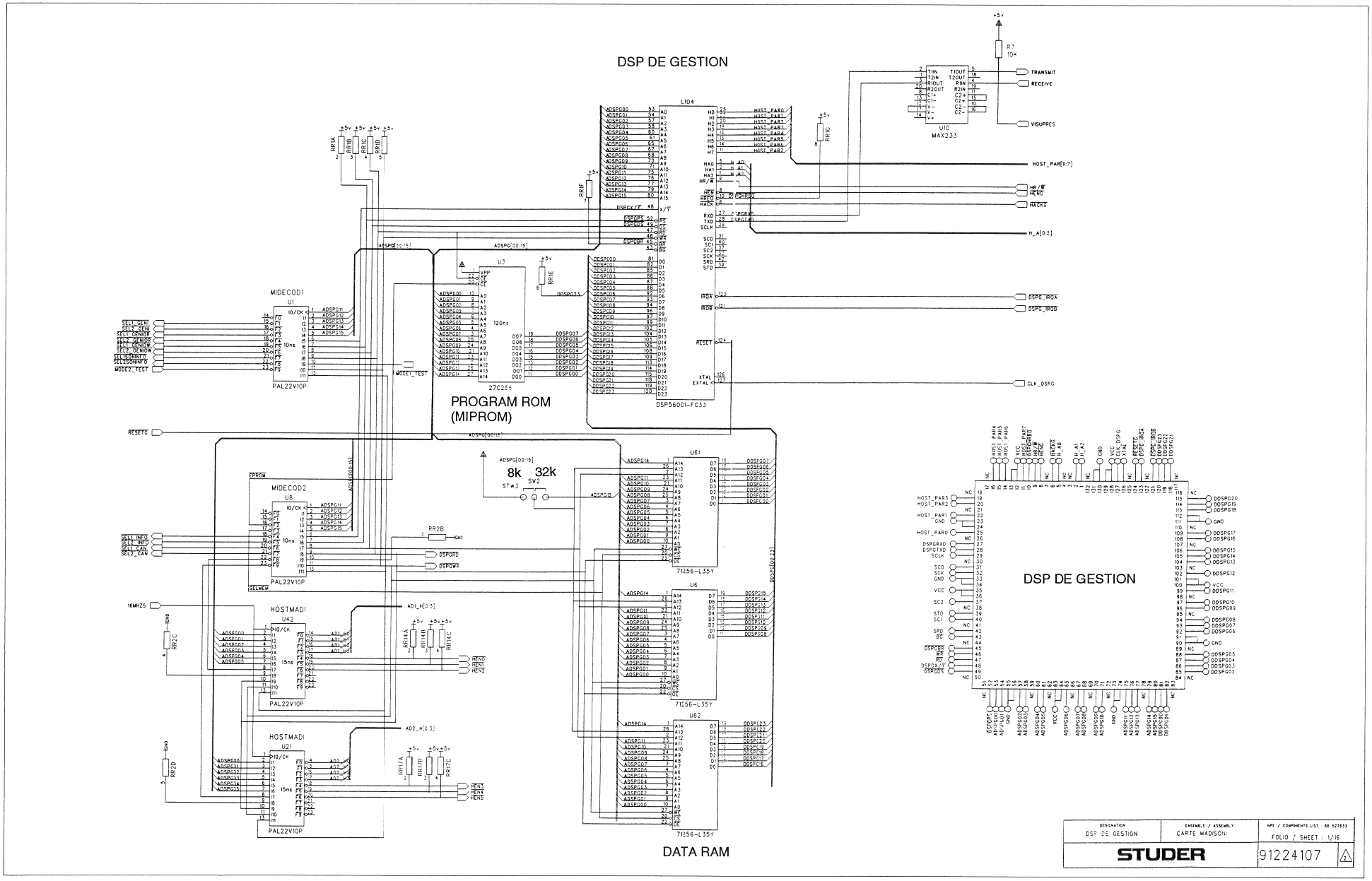

Optical Madisoni 2 Madi Input Board 42.125.303.01
Coax Madisoni 2 Madi Input Board 42.125.303.11

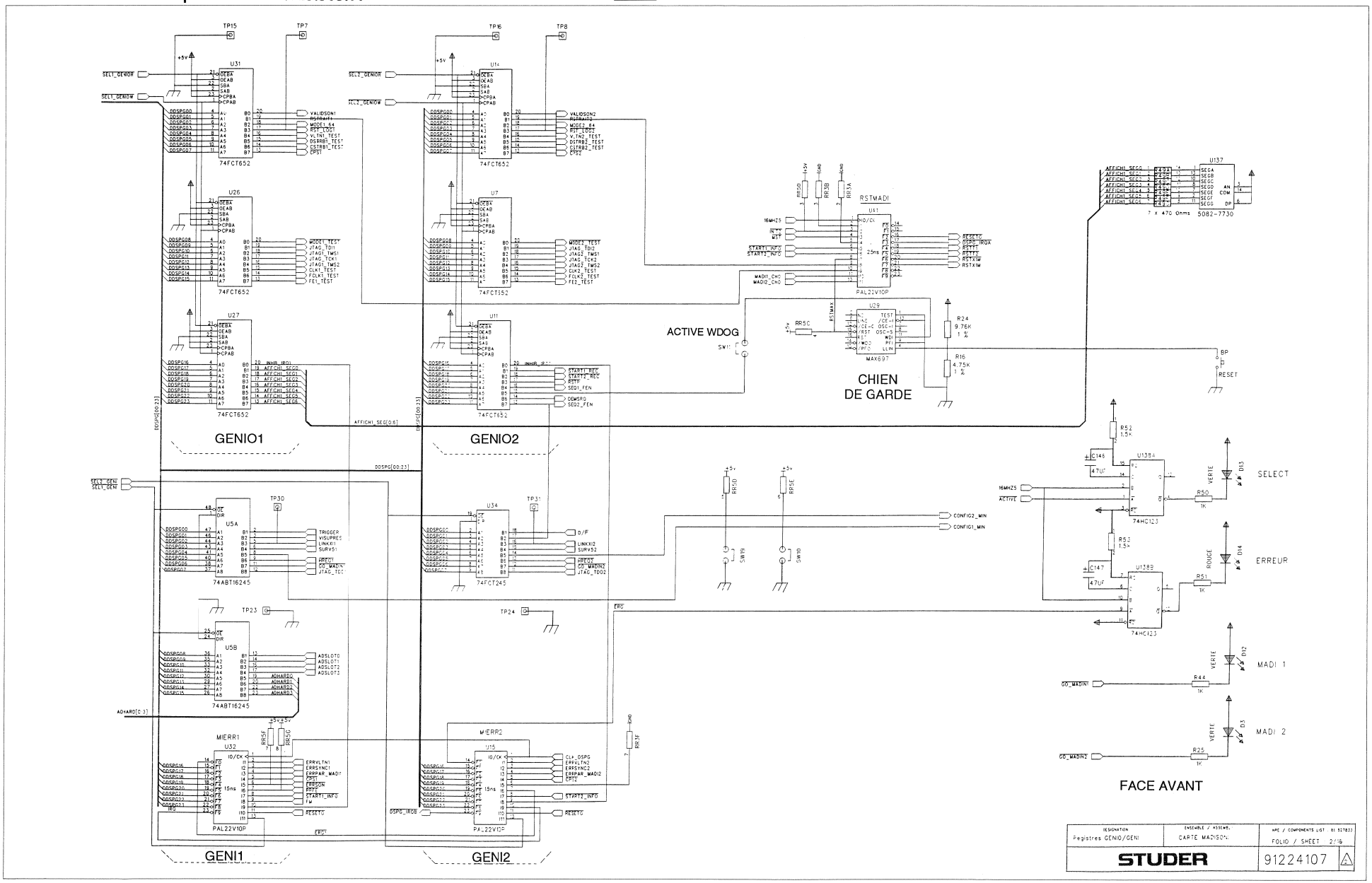

Optical Madisoni 2 Madi Input Board 42.125.303.01
Coax Madisoni 2 Madi Input Board 42.125.303.11

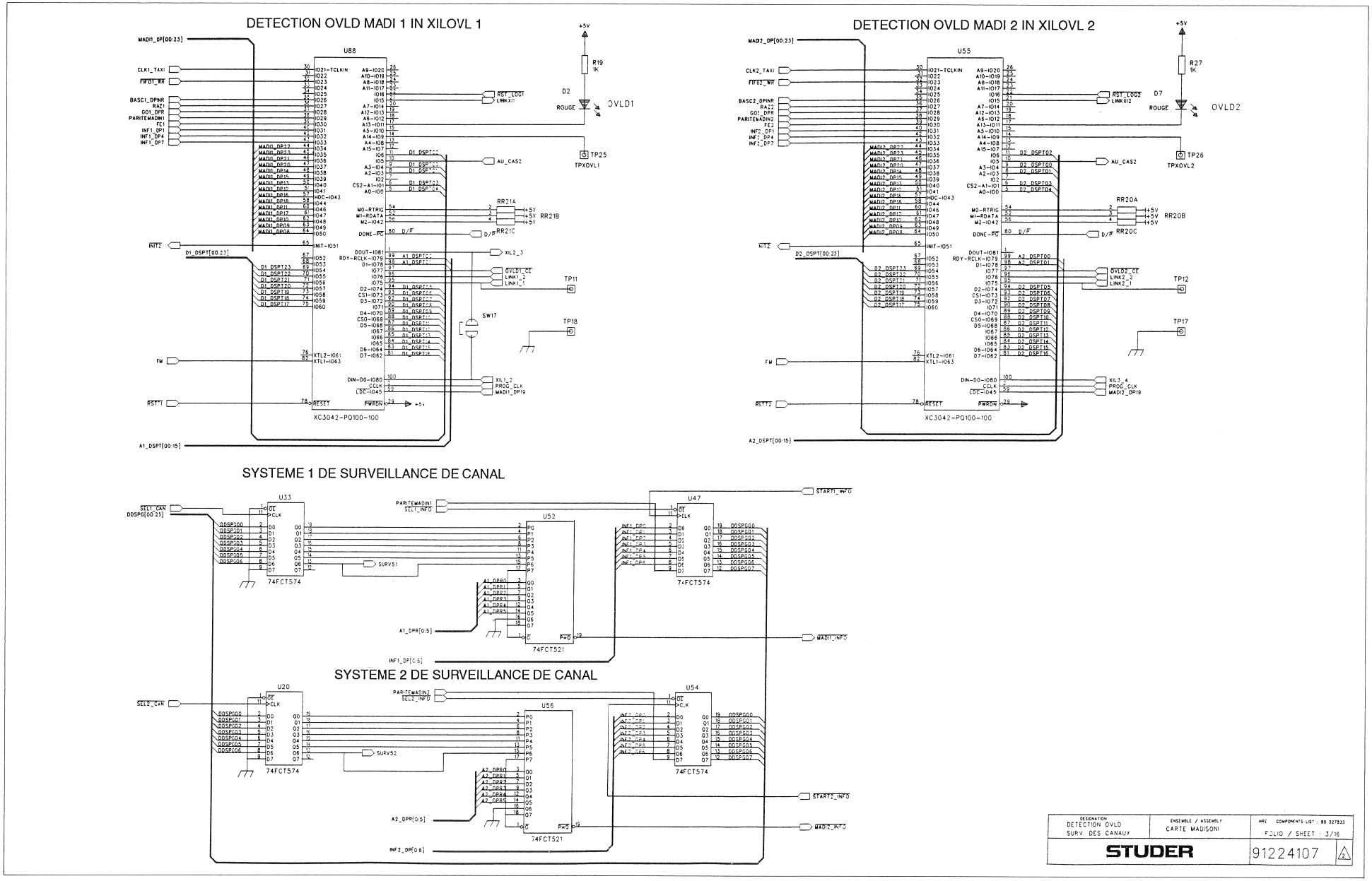

Optical Madisoni 2 Madi Input Board 42.125.303.01
Coax Madisoni 2 Madi Input Board 42.125.303.11

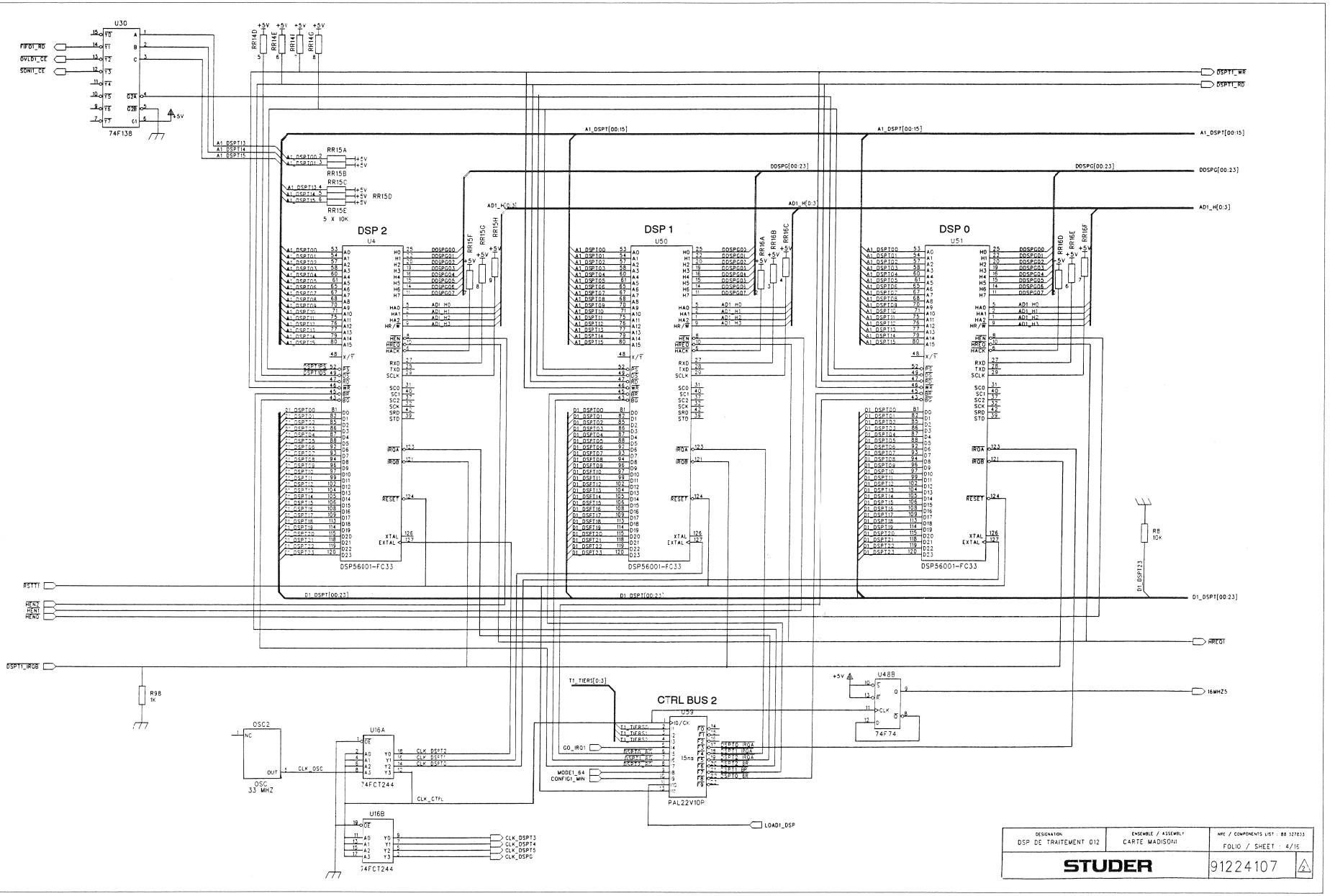

Optical Madisoni 2 Madi Input Board 42.125.303.01
Coax Madisoni 2 Madi Input Board 42.125.303.11

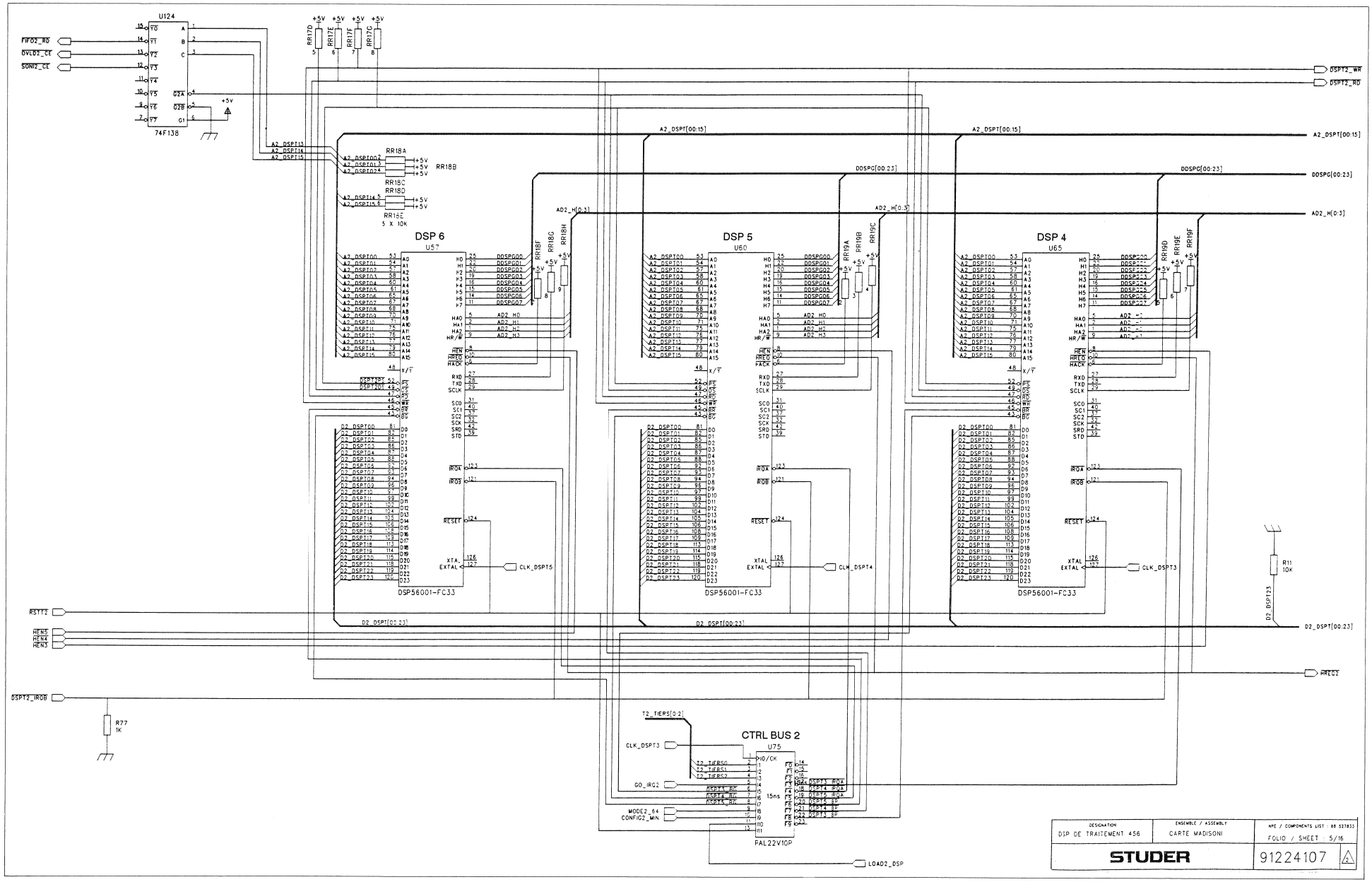

Optical Madisoni 2 Madi Input Board 42.125.303.01
Coax Madisoni 2 Madi Input Board 42.125.303.11

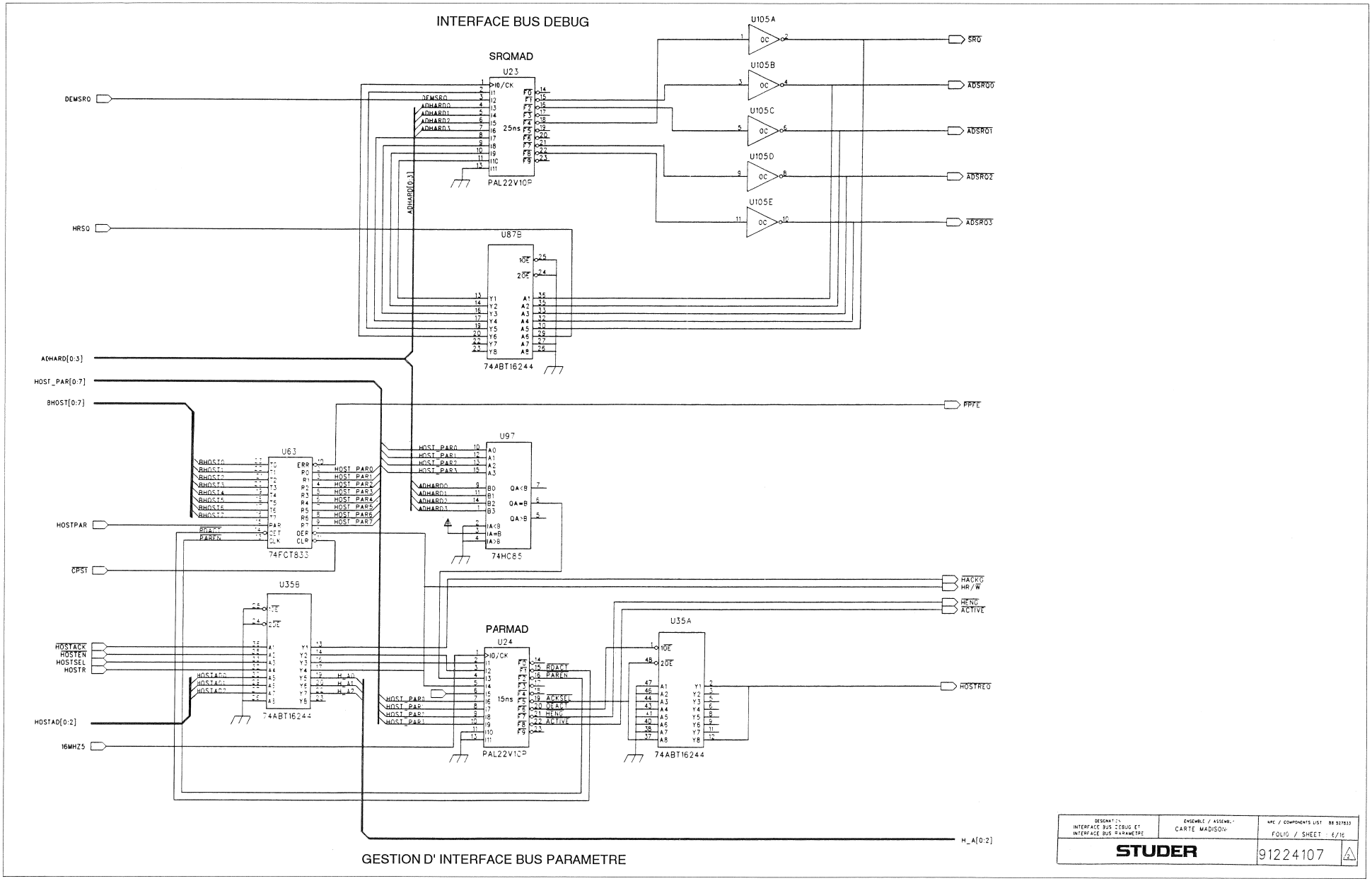

Optical Madisoni 2 Madi Input Board 42.125.303.01
Coax Madisoni 2 Madi Input Board 42.125.303.11

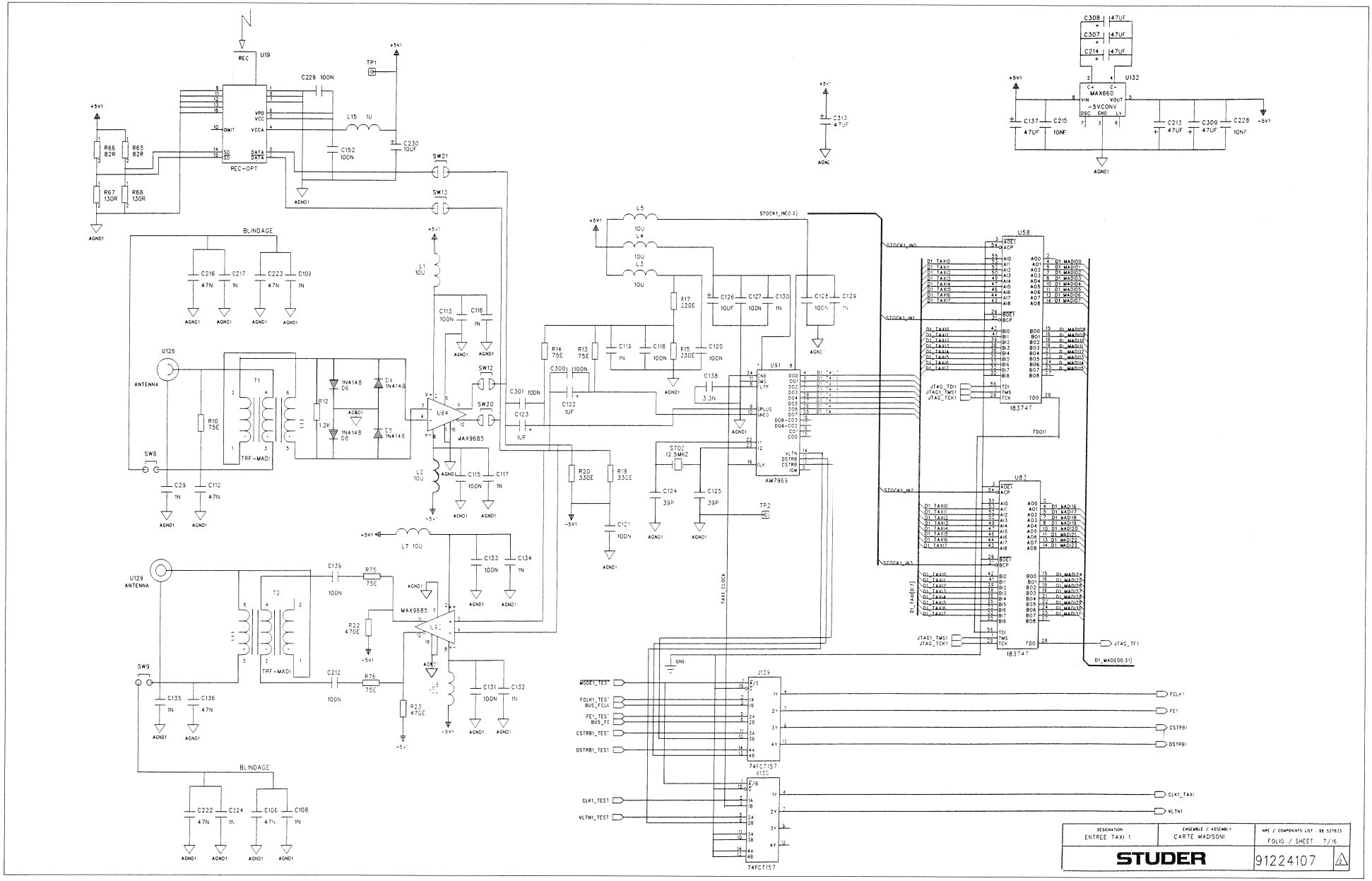

Optical Madisoni 2 Madi Input Board 42.125.303.01
Coax Madisoni 2 Madi Input Board 42.125.303.11

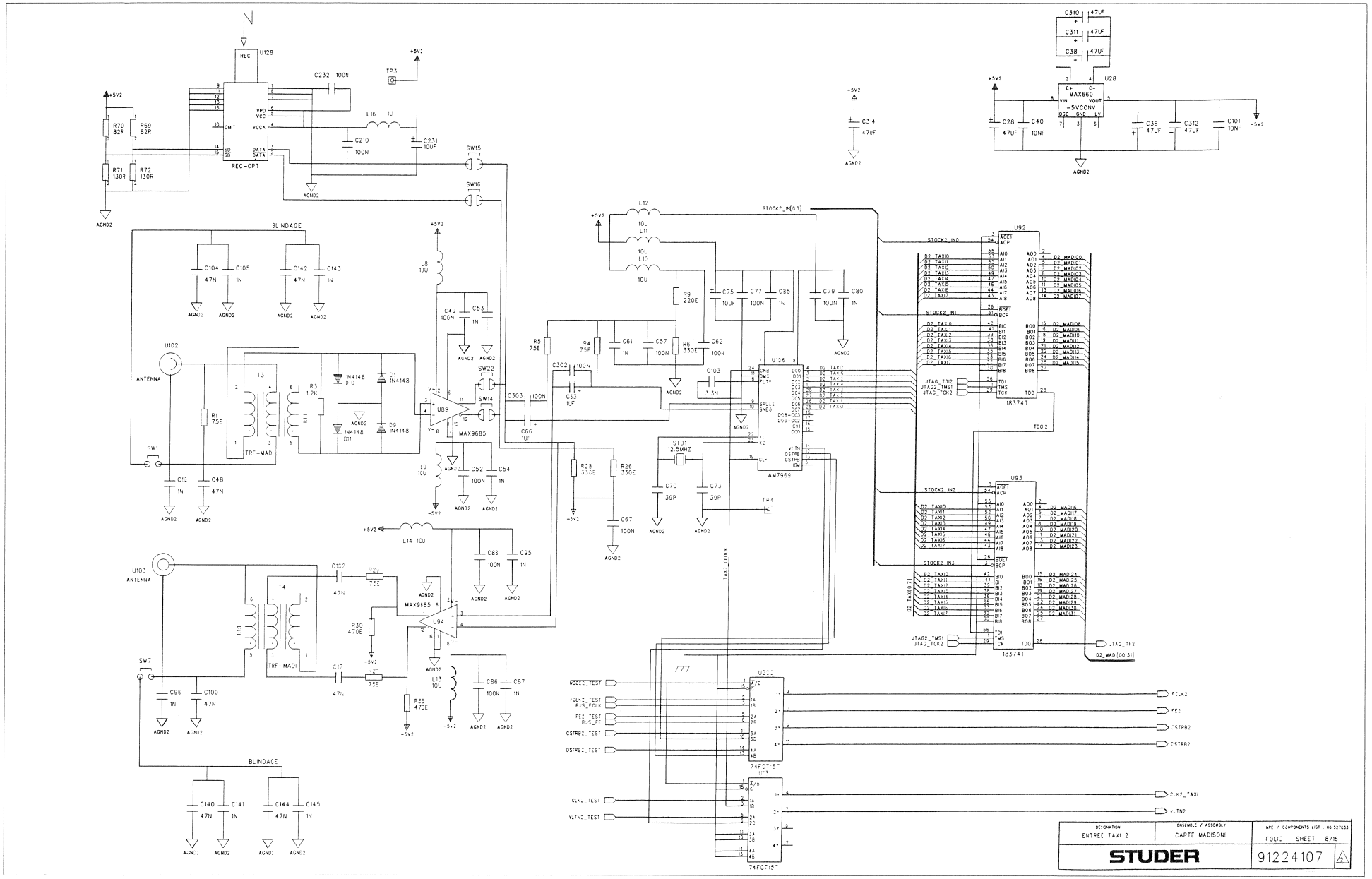

Optical Madisoni 2 Madi Input Board 42.125.303.01
Coax Madisoni 2 Madi Input Board 42.125.303.11

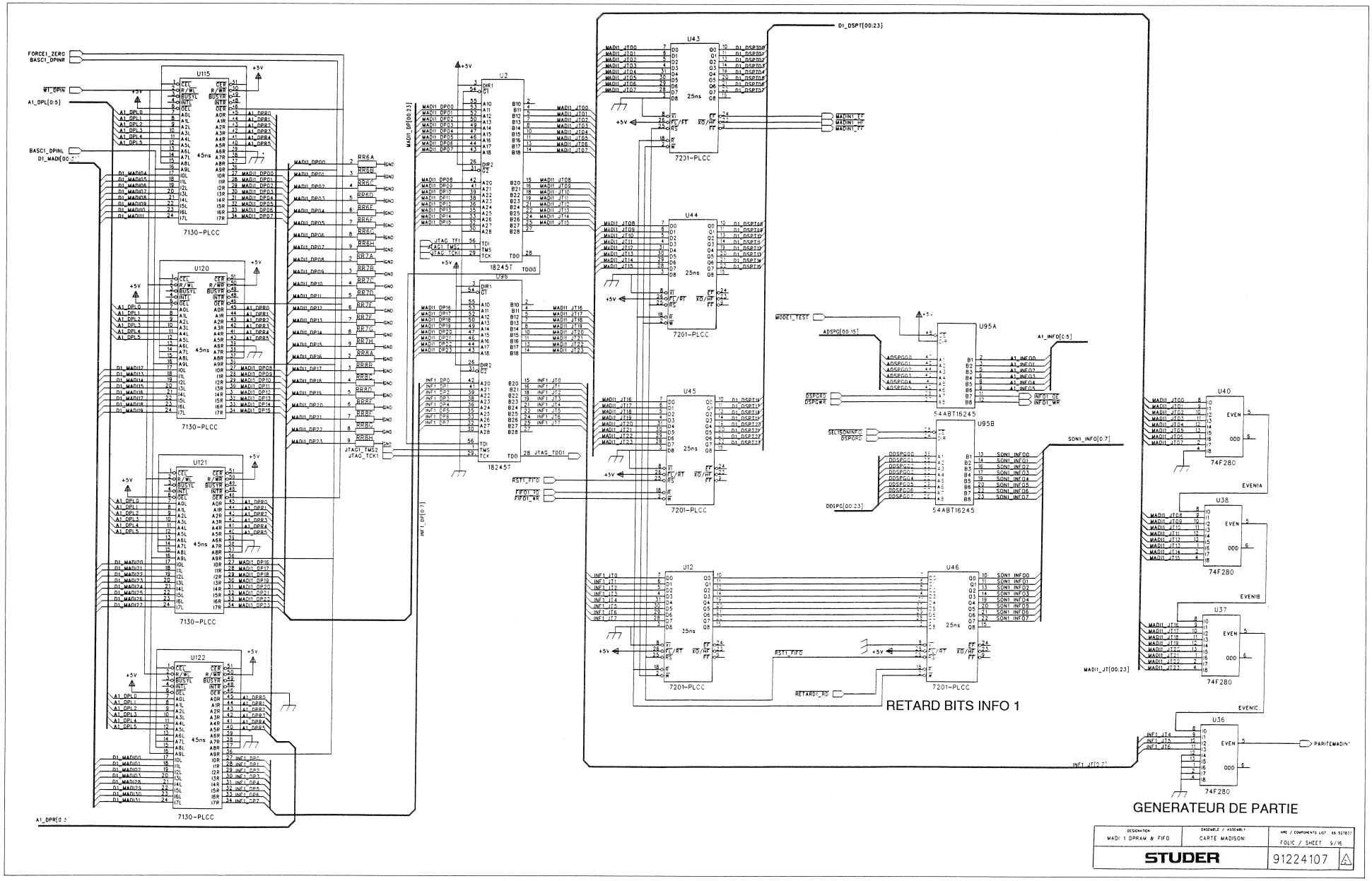

Optical Madisoni 2 Madi Input Board 42.125.303.01
Coax Madisoni 2 Madi Input Board 42.125.303.11

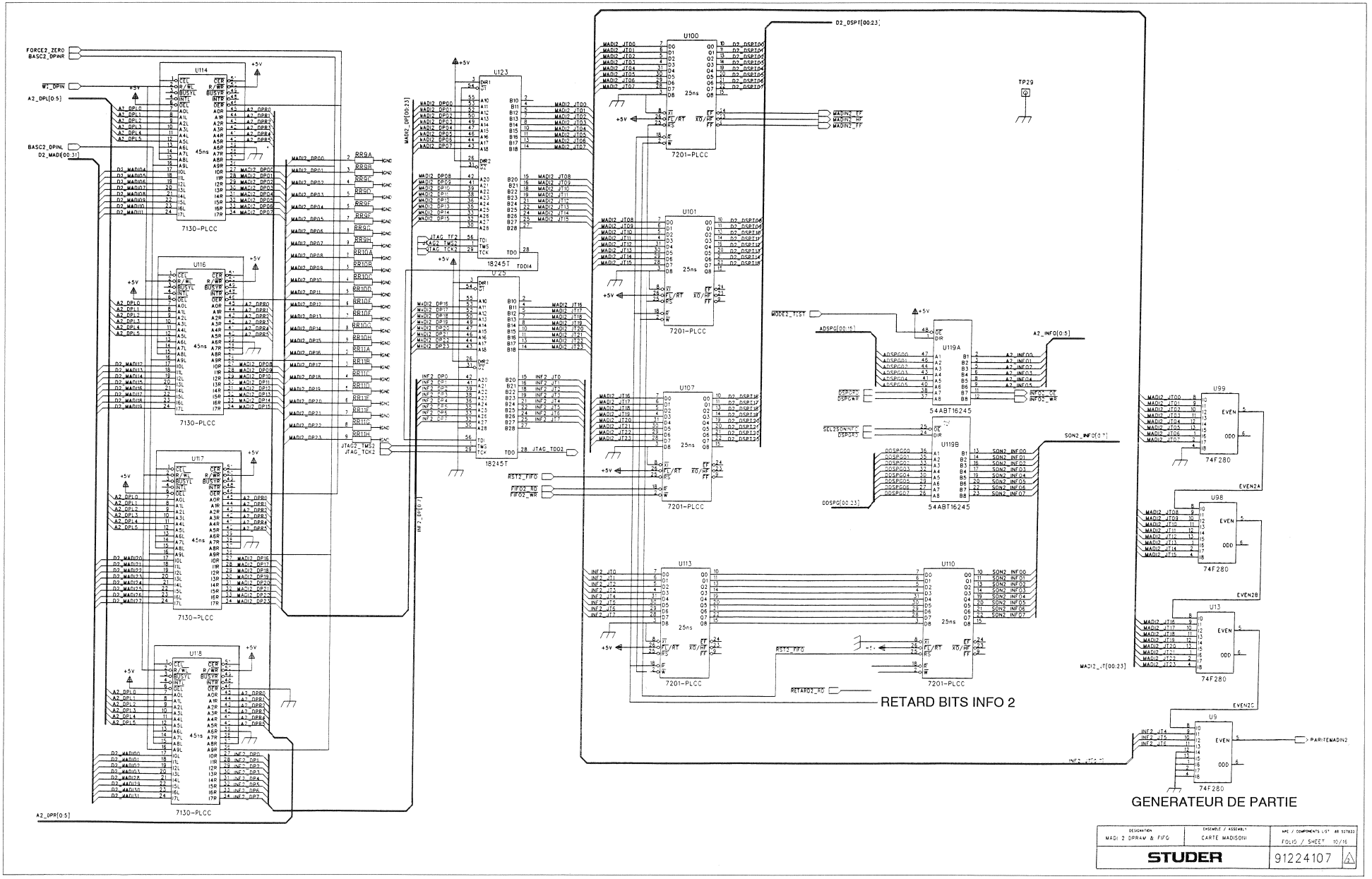

Optical Madisoni 2 Madi Input Board 42.125.303.01
Coax Madisoni 2 Madi Input Board 42.125.303.11

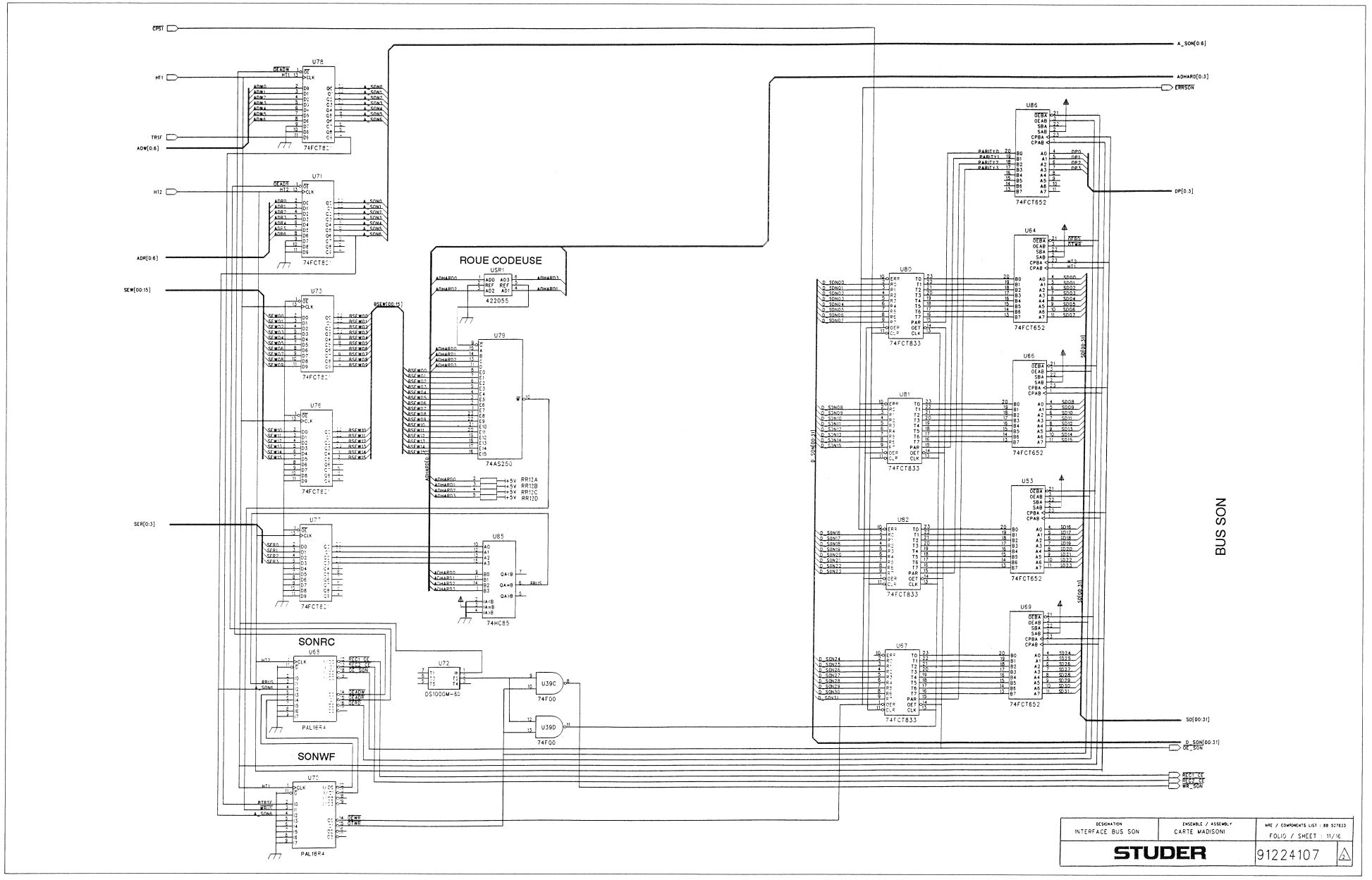

Optical Madisoni 2 Madi Input Board 42.125.303.01
Coax Madisoni 2 Madi Input Board 42.125.303.11

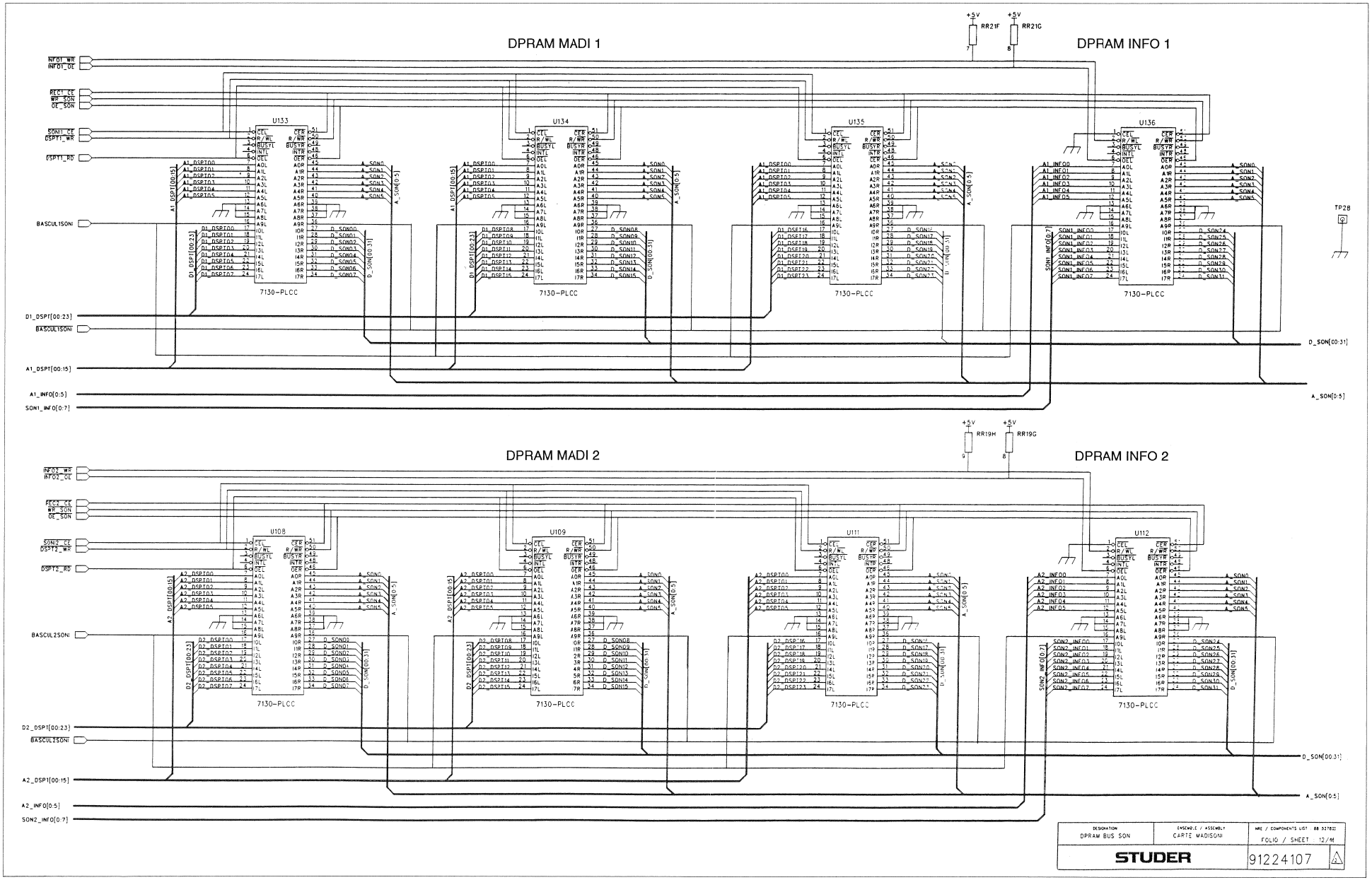

Optical Madisoni 2 Madi Input Board 42.125.303.01
Coax Madisoni 2 Madi Input Board 42.125.303.11

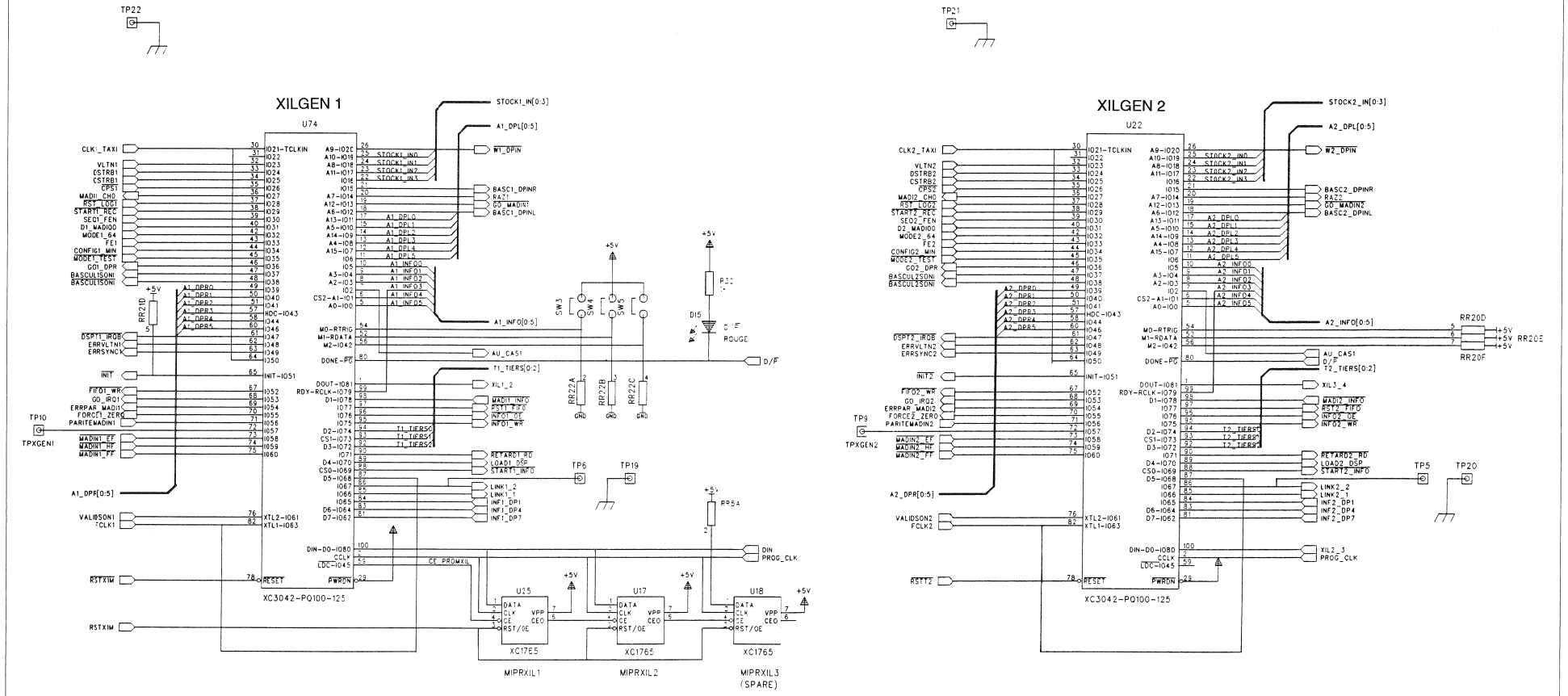

Optical Madisoni 2 Madi Input Board 42.125.303.01
Coax Madisoni 2 Madi Input Board 42.125.303.11

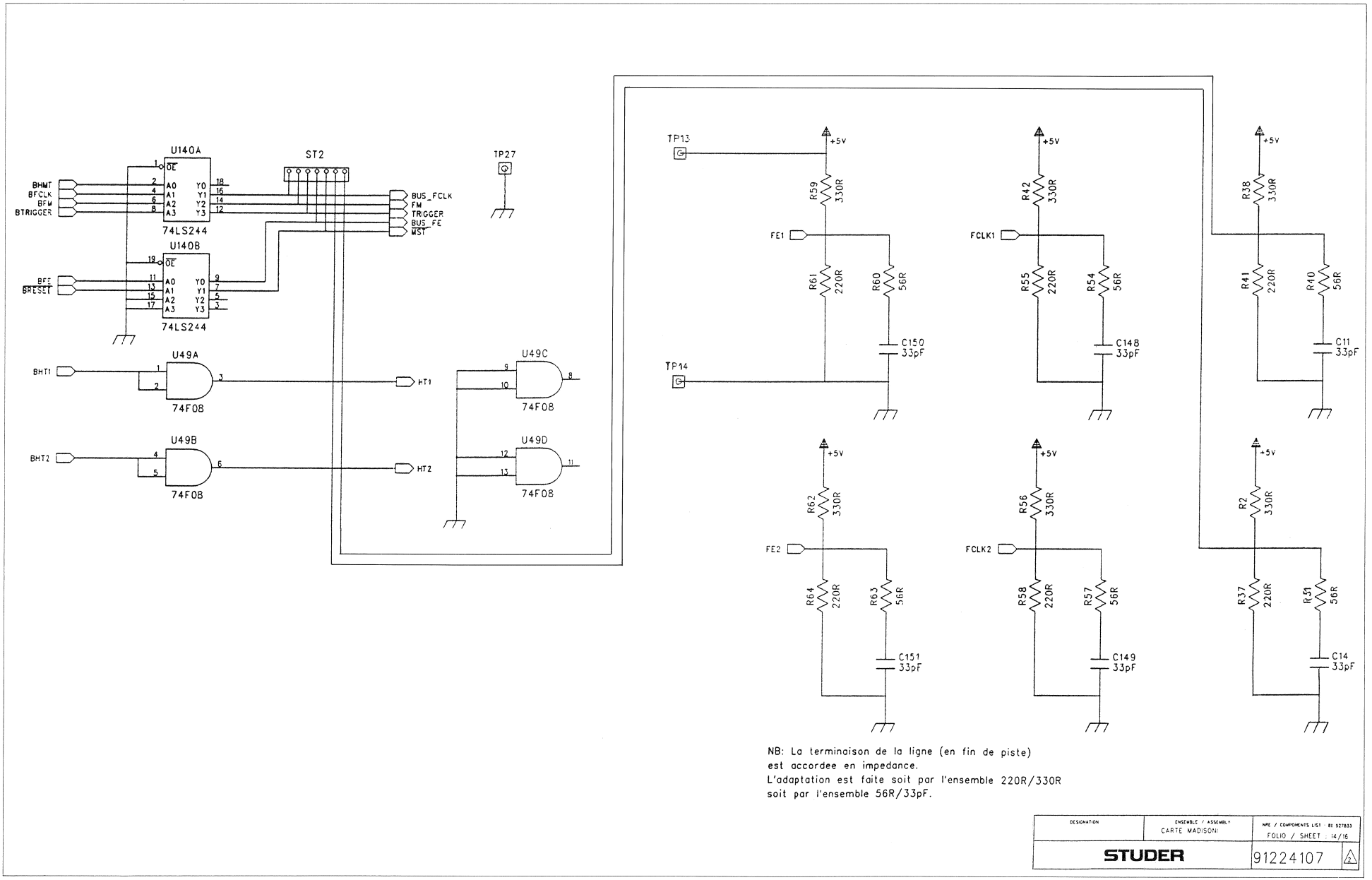

NB: La terminaison de la ligne (en fin de piste)
est accordee en impedance.
L'adaptation est faite soit par l'ensemble 220R/330R
soit par l'ensemble 56R/33pF.

DESIGNATION	ENSEMBLE / ASSEMBLY CARTE MADISONI	NPE / COMPONENTS LIST : 82 527833 FOLIO / SHEET : 14/16
STUDER		91224107

Optical Madisoni 2 Madi Input Board 42.125.303.01
Coax Madisoni 2 Madi Input Board 42.125.303.11

CONNECTEUR SUPERIEUR

RANGEE A	RANGEE B	RANGEE C
J5-A1	J5-B1 MGND	J5-C1
J5-A2	J5-B2	J5-C2
J5-A3	J5-B3	J5-C3
J5-A4	J5-B4	J5-C4
J5-A5	J5-B5	J5-C5
J5-A6	J5-B6 GND	J5-C6
J5-A7	J5-B7 +5V	J5-C7
J5-A8	J5-B8 ADSLOT3	J5-C8
J5-A9	J5-B9 ADSLOT2	J5-C9
J5-A10	J5-B10 ADSLOT1	J5-C10
J5-A11	J5-B11 ADSLOT0	J5-C11
J5-A12	J5-B12 GND	J5-C12
J5-A13	J5-B13	J5-C13
J5-A14	J5-B14	J5-C14
J5-A15	J5-B15 GND	J5-C15
J5-A16	J5-B16	J5-C16
J5-A17	J5-B17	J5-C17
J5-A18	J5-B18	J5-C18
J5-A19	J5-B19	J5-C19
J5-A20	J5-B20	J5-C20
J5-A21	J5-B21	J5-C21
J5-A22	J5-B22	J5-C22
J5-A23	J5-B23	J5-C23
J5-A24	J5-B24	J5-C24
J5-A25	J5-B25	J5-C25
J5-A26	J5-B26	J5-C26
J5-A27	J5-B27	J5-C27
J5-A28	J5-B28	J5-C28
J5-A29	J5-B29	J5-C29
J5-A30	J5-B30	J5-C30
J5-A31	J5-B31	J5-C31
J5-A32	J5-B32 MGND	J5-C32

CONNECTEUR MILIEU

RANGEE A	RANGEE B	RANGEE C
J2-A1 ADR0	J2-B1 ADR1	J2-C1 ADR2
J2-A2 ADR3	J2-B2 ADR4	J2-C2 ADR5
J2-A3 ADR6	J2-B3 ADW5	J2-C3 ADW6
J2-A4 ADW0	J2-B4	J2-C4 TRSF
J2-A5 ADW1	J2-B5	J2-C5 SEW00
J2-A6 ADW2	J2-B6	J2-C6 SEW01
J2-A7 ADW3	J2-B7	J2-C7 SEW02
J2-A8 ADW4	J2-B8	J2-C8 SEW03
J2-A9 GND	J2-B9	J2-C9 GND
J2-A10	J2-B10	J2-C10 SD00
J2-A11 GND	J2-B11	J2-C11 SD01
J2-A12 SEW12	J2-B12 SEW04	J2-C12 SD02
J2-A13 SEW13	J2-B13 SEW05	J2-C13 SD03
J2-A14 SEW14	J2-B14 SEW06	J2-C14 SD04
J2-A15 GND	J2-B15 SEW07	J2-C15 SD05
J2-A16 SEW15	J2-B16 SEW08	J2-C16 SD06
J2-A17 GND	J2-B17 SEW09	J2-C17 SD07
J2-A18 SER0	J2-B18 SEW10	J2-C18 SD08
J2-A19 GND	J2-B19 SEW11	J2-C19 SD09
J2-A20 SER1	J2-B20 GND	J2-C20 SD10
J2-A21	J2-B21 SER2	J2-C21 SD11
J2-A22	J2-B22 SER3	J2-C22 SD12
J2-A23 SD28	J2-B23 GND	J2-C23 SD13
J2-A24 SD29	J2-B24 SD21	J2-C24 SD14
J2-A25 SD30	J2-B25 SD22	J2-C25 SD15
J2-A26 SD31	J2-B26 SD23	J2-C26 SD16
J2-A27 DP0	J2-B27 SD24	J2-C27 SD17
J2-A28 DP1	J2-B28 SD25	J2-C28 SD18
J2-A29 DP2	J2-B29 SD26	J2-C29 SD19
J2-A30 DP3	J2-B30 SD27	J2-C30 SD20
J2-A31	J2-B31	J2-C31
J2-A32 +5V	J2-B32 +5V	J2-C32 +5V

CONNECTEUR INFERIEUR

RANGEE A	RANGEE B	RANGEE C
J4-A1	J4-B1	J4-C1 BHOST0
J4-A2	J4-B2	J4-C2 BHOST1
J4-A3	J4-B3	J4-C3 BHOST2
J4-A4	J4-B4	J4-C4 BHOST3
J4-A5	J4-B5	J4-C5 BHOST4
J4-A6	J4-B6	J4-C6 BHOST5
J4-A7	J4-B7	J4-C7 BHOST6
J4-A8	J4-B8	J4-C8 BHOST7
J4-A9 GND	J4-B9	J4-C9 GND
J4-A10 BFE	J4-B10	J4-C10
J4-A11 GND	J4-B11	J4-C11 HOSTPAR
J4-A12 BHT2	J4-B12	J4-C12 HOSTAD0
J4-A13	J4-B13	J4-C13 HOSTAD1
J4-A14 BHT1	J4-B14	J4-C14 HOSTAD2
J4-A15 GND	J4-B15	J4-C15 HOSTR
J4-A16 BHMT	J4-B16	J4-C16 HOSTACK
J4-A17 GND	J4-B17	J4-C17 HOSTEN
J4-A18	J4-B18	J4-C18 HOSTSEL
J4-A19 GND	J4-B19	J4-C19 HOSTREQ
J4-A20 BFM	J4-B20 GND	J4-C20
J4-A21	J4-B21	J4-C21 HPSO
J4-A22	J4-B22	J4-C22 SPS
J4-A23	J4-B23 GND	J4-C23
J4-A24 BFCLK	J4-B24	J4-C24 BTRIGGER
J4-A25	J4-B25	J4-C25
J4-A26 BRESET	J4-B26	J4-C26 ADSRQ3
J4-A27	J4-B27	J4-C27 ADSRQ2
J4-A28	J4-B28	J4-C28 ADSRQ1
J4-A29	J4-B29	J4-C29 ADSRQ0
J4-A30	J4-B30	J4-C30
J4-A31 MGND	J4-B31	J4-C31 MGND
J4-A32 +5V	J4-B32 +5V	J4-C32 +5V

CONNECTEUR DEBUG

J6-1	VISUPRES
J6-2	RECEIVE
J6-3	TRANSMIT
J6-4	
J6-5	GND
J6-6	
J6-7	
J6-8	
J6-9	

CONNECTEUR PROG XILINX

J3-1	+5V
J3-2	
J3-3	
J3-4	PROG_CLK
J3-5	D/F
J3-6	DIN

DESIGNATION	ENSEMBLE / ASSEMBLY	WPE COMPONENTS LIST : 88 537833
CONNECTEURS	CARTE MADISONI	FOLIO / SHEET 15/16
STUDER	91224107	4

Optical Madisoni 2 Madi Input Board 42.125.303.01
Coax Madisoni 2 Madi Input Board 42.125.303.11

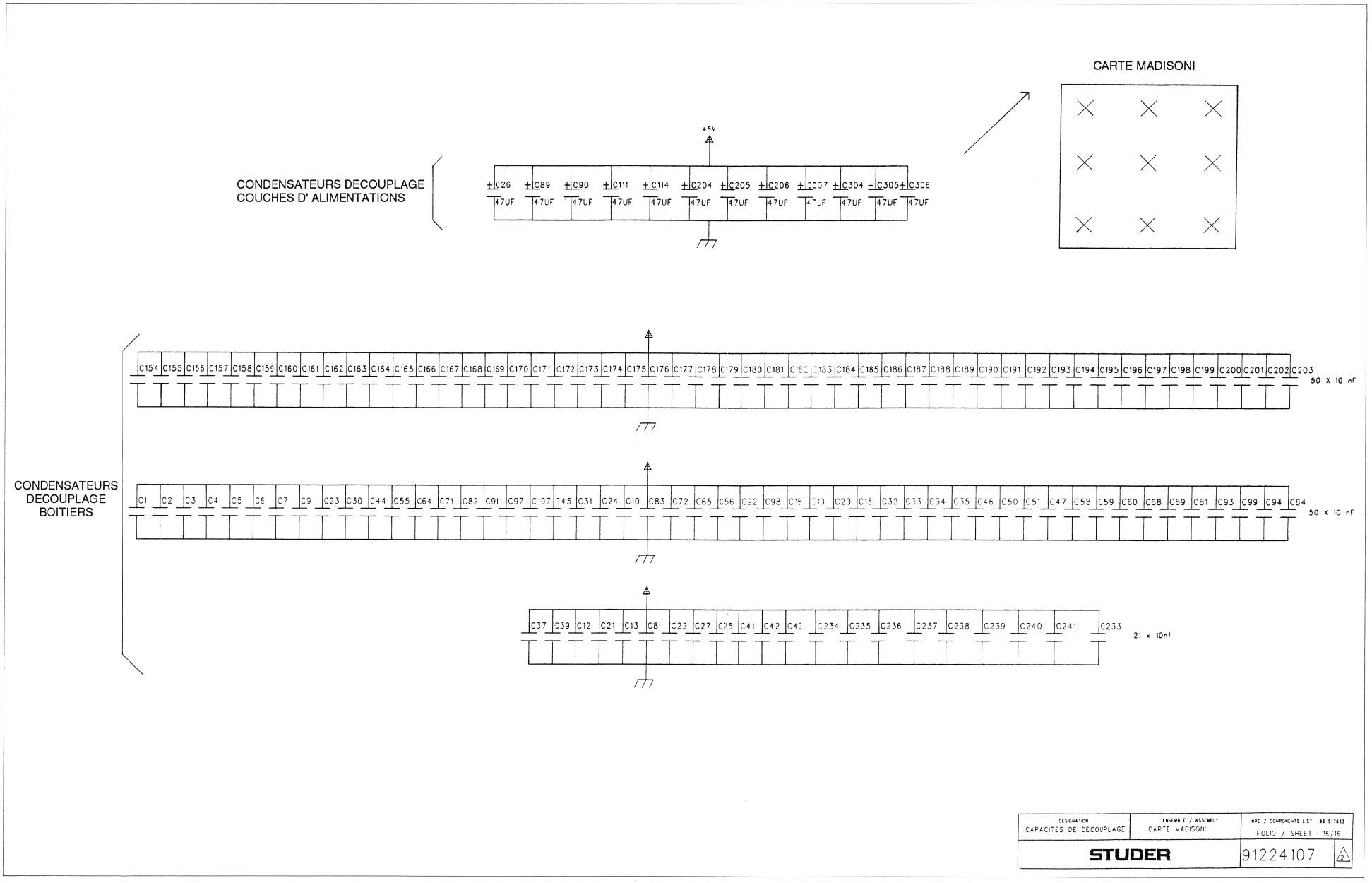

Optical Madisoni 2 Madi Input Board 42.125.303.01
Coax Madisoni 2 Madi Input Board 42.125.303.11

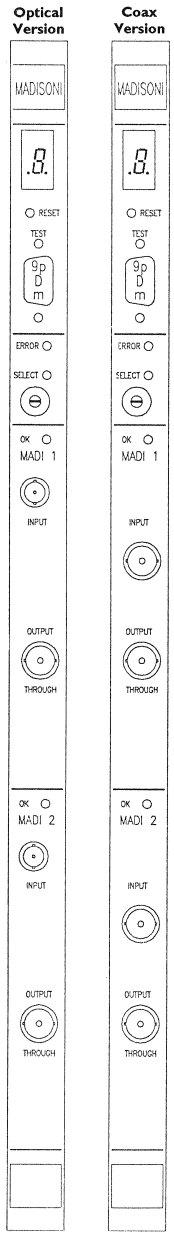

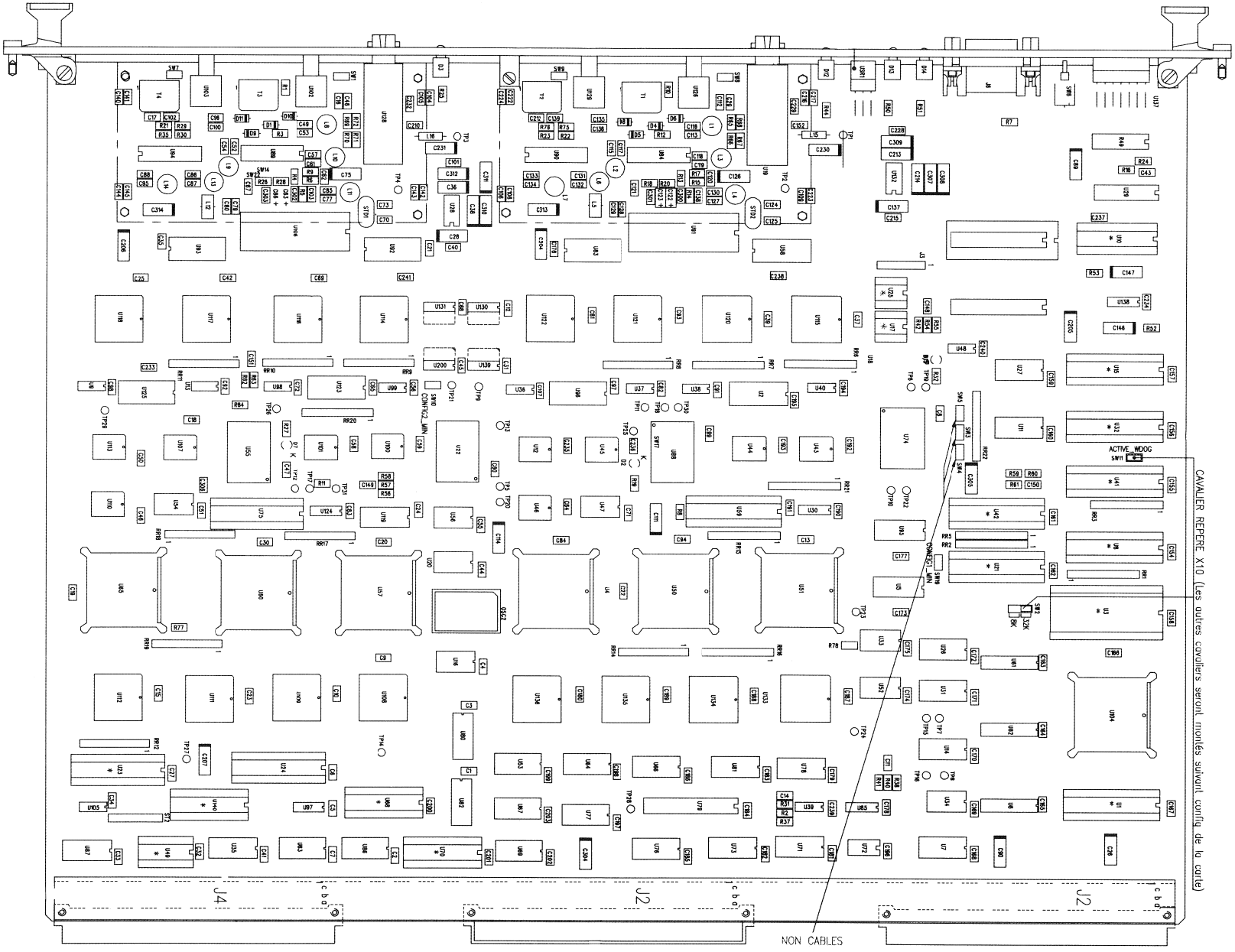

Optical Madisoni 2 Madi Input Board 42.125.303.01
Coax Madisoni 2 Madi Input Board 42.125.303.11

MODIF.: IND. Xa=ajout - IND. Xm=modif. ref. et/ou valeur - IND. Xs=suppression

REPERE	IND	COMPOSANT	DESIGNATION	VALEUR	QTE	FABRIQ.	BOITIER
A1		91224107	SCHEMA		1		
A2		91224108	FILM CIRCUIT		1		
A3		30224108	TEST DE CONFORMITE		1		
A4		91224109	FILM DE SERIGRAPHIE		1		
A5		91224110	FILM EPARGNE SOUDURE		1		
A6		91224126	FILM PATE A BRASER		1		
A7		30224126	ECRAN PATE A BRASER		1		
A8		91122550	PLAN DE FABRICATION		1		
A9		30122550	OUTIL DE FABRICATION		1		
A10		91122552	USINAGE FACE AVANT		1		
A11		91224111	FILM SERIGRAPHIE FACE AVANT		1		
A12		91224112	PLAN DE SERIGRAPHIE FACE AVANT		1		
A13		30224112	OUTIL DE SERIGRAPHIE FACE AVANT		1		
A14	1m	91815561	MYLAR ETIQUETTE POIGNEE REPERE D9		1		
A15		91830750	PLAN DE SERIGRAPHIE ETIQ. POIGNEE		1		
A16		30830750	OUTIL DE SERIGRAPHIE POIGNEE		1		
A17		91815505	ETIQUETTE REPERE CONNECTEUR ✓		1		
A18		91316870	RAIDISSEUR		1		
A19		91122551	PLAN D'EQUIPEMENT		1		
A20	1a	91830799	BLINDAGE		2		
A21	1a	91830800	PATTE DE FIXATION		1		
A22	1a	91815597	VIS M2,5x14		6		
A23	5a	91830883	PLAN DE CONFIGURATION CARTE		1		
D1		95222854	DIODE	1N4448	1		
D2	1a	95110015	LED DIA:1,8 ROUGE	LTL709R (223945)	1	ORBITEC	
D3		95163002	LED VERT	HLMP-1790	1		
D4		95222854	DIODE	1N4448	1		
D5		95222854	DIODE	1N4448	1		
D6		95222854	DIODE	1N4448	1		
D7	1a	95110015	LED DIA:1,8 ROUGE	LTL709R (223945)	1	ORBITEC	
D8		95222854	DIODE	1N4448	1		
D9		95222854	DIODE	1N4448	1		
D10		95222854	DIODE	1N4448	1		
D11		95222854	DIODE	1N4448	1		
D12		95163002	LED VERT	HLMP-1790	1		
D13		95163002	LED VERT	HLMP-1790	1		
D14		95163000	LED ROUGE	HLMP-1700	1		
D15	1a	95110015	LED DIA:1,8 ROUGE	LTL709R (223945)	1	ORBITEC	
J2		94410049	CONNECT DIN 96Pts F	COUDE MALE	1	SOURIAU	
J3	1s	94450009	REPART MINI WRAP	385-0358-1-40-40-0	0		
J4		94410049	CONNECT DIN 96Pts F	COUDE MALE	1	SOURIAU	
J5		94410049	CONNECT DIN 96Pts F	COUDE MALE	1	SOURIAU	
J6		94480021	CONNECT SUBD 9Pts M	ZEDE 11'979-011	1	ITT	
L1		95400006	SELF	10uH 10%	1	STI	
L2		95400006	SELF	10uH 10%	1	STI	
L3		95400006	SELF	10uH 10%	1	STI	
L4		95400006	SELF	10uH 10%	1	STI	
L5		95400007	SELF	10uH 1A	1	STI	
L6		95400006	SELF	10uH 10%	1	STI	
L7		95400006	SELF	10uH 10%	1	STI	
L8		95400006	SELF	10uH 10%	1	STI	
L9		95400006	SELF	10uH 10%	1	STI	
L10		95400006	SELF	10uH 10%	1	STI	
L11		95400006	SELF	10uH 10%	1	STI	
L12		95400007	SELF	10uH 1A	1	STI	
L13		95400006	SELF	10uH 10%	1	STI	
L14		95400006	SELF	10uH 10%	1	STI	
L15	1m	95450003	SELF REF:2129	22uH	1		
L16	1m	95450003	SELF REF:2129	22uH	1		
OSC2		95010011	OSC CMOS +/- 100PPM	NCH08OC-33MH3	1	SARONIX	
RR1		95650001	RESEAU DE RESISTANCE	SIL 8/9 10K C104	1		
RR2		95650025	RESEAU DE RESISTANCE	SIL 8/9 1K C104	1		
RR3		95650025	RESEAU DE RESISTANCE	SIL 8/9 1K C104	1		
RR5		95650001	RESEAU DE RESISTANCE	SIL 8/9 10K C104	1		
RR6		95650025	RESEAU DE RESISTANCE	SIL 8/9 1K C104	1		
RR7		95650025	RESEAU DE RESISTANCE	SIL 8/9 1K C104	1		
RR8		95650025	RESEAU DE RESISTANCE	SIL 8/9 1K C104	1		
RR9		95650025	RESEAU DE RESISTANCE	SIL 8/9 1K C104	1		
RR10		95650025	RESEAU DE RESISTANCE	SIL 8/9 1K C104	1		
RR11		95650025	RESEAU DE RESISTANCE	SIL 8/9 1K C104	1		
RR12		95650001	RESEAU DE RESISTANCE	SIL 8/9 10K C104	1		
RR14		95650001	RESEAU DE RESISTANCE	SIL 8/9 10K C104	1		
RR15		95650001	RESEAU DE RESISTANCE	SIL 8/9 10K C104	1		
RR16		95650001	RESEAU DE RESISTANCE	SIL 8/9 10K C104	1		
RR17		95650001	RESEAU DE RESISTANCE	SIL 8/9 10K C104	1		
RR18		95650001	RESEAU DE RESISTANCE	SIL 8/9 10K C104	1		
RR19		95650001	RESEAU DE RESISTANCE	SIL 8/9 10K C104	1		
RR20		95650001	RESEAU DE RESISTANCE	SIL 8/9 10K C104	1		
RR21		65650001	RESEAU DE RESISTANCE	SIL 8/9 10K C104	1		
RR22		95650025	RESEAU DE RESISTANCE	SIL 8/9 1K C104	1		
RA9		95650012	RESEAU DE RESISTANCE	DIP 14 470 OHMS	1		
S12		94450009	REPART MINI WRAP	385-0358-1-40-40-0	.175	COMATEL	
STD1		95010012	QUARTZ HC18/U	12.5MHZ 89-01-1013	1	STI	
STD2		95010012	QUARTZ HC18/U	12.5MHZ 89-01-1013	1	STI	
SW1		94450009	REPART MINI WRAP	385-0358-1-40-40-0	.05	COMATEL	
SW2		94450009	REPART MINI WRAP	385-0358-1-40-40-0	.075	COMATEL	
SW3	1s	94450009	REPART MINI WRAP	385-0358-1-40-40-0	0	COMATEL	
SW4	1s	94450009	REPART MINI WRAP	385-0358-1-40-40-0	0	COMATEL	
SW5	1s	94450009	REPART MINI WRAP	385-0358-1-40-40-0	0	COMATEL	
SW6		94563003	POUSSOIR	9233WWCD	1	APR	
SW7		94450009	REPART MINI WRAP	385-0358-1-40-40-0	.05	COMATEL	
SW8		94450009	REPART MINI WRAP	385-0358-1-40-40-0	.05	COMATEL	
SW9		94450009	REPART MINI WRAP	385-0358-1-40-40-0	.05	COMATEL	
SW10		94450009	REPART MINI WRAP	385-0358-1-40-40-0	.05	COMATEL	
SW11		94450009	REPART MINI WRAP	385-0358-1-40-40-0	.05	COMATEL	
SW19		94450009	REPART MINI WRAP	385-0358-1-40-40-0	.05	COMATEL	
T1	5m	95400005	TRANSFO HF	76602/5	1	NEWPORT	NEWPORT
T2	5m	95400005	TRANSFO HF	76602/5	1	NEWPORT	NEWPORT
T3	5m	95400005	TRANSFO HF	76602/5	1	NEWPORT	NEWPORT
T4	5m	95400005	TRANSFO HF	76602/5	1	NEWPORT	NEWPORT
TP1		94450009	REPART MINI WRAP	385-0358-1-40-40-0	.025	COMATEL	
TP2		94450009	REPART MINI WRAP	385-0358-1-40-40-0	.025	COMATEL	
TP3		94450009	REPART MINI WRAP	385-0358-1-40-40-0	.025	COMATEL	
TP4		94450009	REPART MINI WRAP	385-0358-1-40-40-0	.025	COMATEL	
TP5		94450009	REPART MINI WRAP	385-0358-1-40-40-0	.025	COMATEL	
TP6		94450009	REPART MINI WRAP	385-0358-1-40-40-0	.025	COMATEL	
TP7		94450009	REPART MINI WRAP	385-0358-1-40-40-0	.025	COMATEL	
TP8		94450009	REPART MINI WRAP	385-0358-1-40-40-0	.025	COMATEL	
TP9		94450009	REPART MINI WRAP	385-0358-1-40-40-0	.025	COMATEL	
TP10		94450009	REPART MINI WRAP	385-0358-1-40-40-0	.025	COMATEL	
TP11		94450009	REPART MINI WRAP	385-0358-1-40-40-0	.025	COMATEL	
TP12		94450009	REPART MINI WRAP	385-0358-1-40-40-0	.025	COMATEL	
TP13		94450009	REPART MINI WRAP	385-0358-1-40-40-0	.025	COMATEL	
TP14		94450009	REPART MINI WRAP	385-0358-1-40-40-0	.025	COMATEL	
TP15		94450009	REPART MINI WRAP	385-0358-1-40-40-0	.025	COMATEL	
TP16		94450009	REPART MINI WRAP	385-0358-1-40-40-0	.025	COMATEL	
TP17		94450009	REPART MINI WRAP	385-0358-1-40-40-0	.025	COMATEL	
TP18		94450009	REPART MINI WRAP	385-0358-1-40-40-0	.025	COMATEL	
TP19		94450009	REPART MINI WRAP	385-0358-1-40-40-0	.025	COMATEL	
TP20		94450009	REPART MINI WRAP	385-0358-1-40-40-0	.025	COMATEL	
TP21		94450009	REPART MINI WRAP	385-0358-1-40-40-0	.025	COMATEL	
TP22		94450009	REPART MINI WRAP	385-0358-1-40-40-0	.025	COMATEL	
TP23		94450009	REPART MINI WRAP	385-0358-1-40-40-0	.025	COMATEL	
TP24		94450009	REPART MINI WRAP	385-0358-1-40-40-0	.025	COMATEL	
TP25	1a	94450009	REPART MINI WRAP	385-0358-1-40-40-0	.025	COMATEL	
TP26	1a	94450009	REPART MINI WRAP	385-0358-1-40-40-0	.025	COMATEL	
TP27	1a	94450009	REPART MINI WRAP	385-0358-1-40-40-0	.025	COMATEL	
TP28	1a	94450009	REPART MINI WRAP	385-0358-1-40-40-0	.025	COMATEL	
TP29	1a	94450009	REPART MINI WRAP	385-0358-1-40-40-0	.025	COMATEL	
TP30	1a	94450009	REPART MINI WRAP	385-0358-1-40-40-0	.025	COMATEL	
TP31	1a	94450009	REPART MINI WRAP	385-0358-1-40-40-0	.025	COMATEL	
U1		95300092	CIRCUIT INTEGRE	PAL22V10H-10PC	1	ADVANCED	DIP24 Et
U2		00010136	PROGRAMME	"MMIDECOD1"	1		
U3	3m	95320000	CIRCUIT INTEGRE	27:256	1		DIP28
U3	3a	00010146	CIRCUIT INTEGRE	"MMIPROM"	1		
U4		95300082	CIRCUIT INTEGRE	DSP56001-FC33	1		PQFP132
U6	6m	95300090	CIRCUIT INTEGRE	71256-L35Y	1	IDT	SSOP28
U8		95300092	CIRCUIT INTEGRE	PAL22V10H-10PC	1	ADVANCED	DIP24 Et
U8	3a	00010125	PROGRAMME	"MMIDECOD2"	1		
U10		95360204	CIRCUIT INTEGRE	MAX233	1	MAXIM	DIP20
U12	4m	95300091	CIRCUIT INTEGRE	7200LA25J	1	IDT	PLCC32
U15		95300093	CIRCUIT INTEGRE	PAL22V10H-15PC	1	ADVANCED	DIP24 Et
U15	3a	00010129	PROGRAMME	"MMIERR2"	1		
U16	2m	95300181	CIRCUIT INTEGRE	74FCT244ASO	1	IDT	SO20L
U17		95300096	CIRCUIT INTEGRE	XC1765-PD8C	1	XILINX	DIP8
U17	3a	00010134	PROGRAMME	"MMPRXIL2"	1		
U18	1s	95300096	CIRCUIT INTEGRE	XC1765-PD8C	0	XILINX	DIP8
U18	3s	00010135	PROGRAMME	"MMPRXIL3"	0		
U19	5m		NEANT				
U20	2m	95300178	CIRCUIT INTEGRE	74FCT574ASO	1	IDT	SO20L
U21		95300093	CIRCUIT INTEGRE	PAL22V10H-15PC	1	ADVANCED	DIP24 Et
U21	3a	00010126	PROGRAMME	"MHOSTMADI"	1		
U22	1m	95300097	CIRCUIT INTEGRE	XC3042-125PQ100C	1	XILINX	PQFP100
U23		95360208	CIRCUIT INTEGRE	PAL22V10Q-25PC	1	ADVANCED	DIP24 Et
U23	3a	00010131	PROGRAMME	"MSDMAD"	1		
U24		95300093	CIRCUIT INTEGRE	PAL22V10H-15PC	1	ADVANCED	DIP24 Et
U24	3a	00010132	PROGRAMME	"MPARMAD"	1		
U25		95300096	CIRCUIT INTEGRE	XC1765-PD8C	1	XILINX	DIP8
U25	3a	00010133	PROGRAMME	"MMPRXIL1"	1		
U28		95300095	CIRCUIT INTEGRE	MAX660CPA	1	MAXIM	DIP8
U29		95360161	CIRCUIT INTEGRE	MAX697	1	MAXIM	DIP16
U32		95300093	CIRCUIT INTEGRE	PAL22V10H-15PC	1	ADVANCED	DIP24 Et
U32	3a	00010128	PROGRAMME	"MMIERR1"	1		
U33	2m	95300178	CIRCUIT INTEGRE	74FCT574ASO	1	IDT	SO20L
U39	2m	95300180	CIRCUIT INTEGRE	74F00SC	1	NATIONAL	SO14
U41		95360208	CIRCUIT INTEGRE	PAL22V10Q-25PC	1	ADVANCED	DIP24 Et
U41	3a	00010127	PROGRAMME	"MSTMADI"	1		
U42		95300093	CIRCUIT INTEGRE	PAL22V10H-15PC	1	ADVANCED	DIP24 Et
U42	3a	00010126	PROGRAMME	"MHOSTMADI"	1		
U43	4m	95300091	CIRCUIT INTEGRE	7200-LA25J	1	IDT	PLCC32
U44	4m	95300091	CIRCUIT INTEGRE	7200-LA25J	1	IDT	PLCC32
U45	4m	95300091	CIRCUIT INTEGRE	7200-LA25J	1	IDT	PLCC32
U46	4m	95300091	CIRCUIT INTEGRE	7200-LA25J	1	IDT	PLCC32
U47	2m	95300178	CIRCUIT INTEGRE	74FCT574ASO	1	TEXAS	PLCC32
U48	2m	95300175	CIRCUIT INTEGRE	74F74SC	1	TEXAS	SO14
U49	1a	95360114	CIRCUIT INTEGRE	74F08	1		DIP14
U50		95300082	CIRCUIT INTEGRE	DSP56001-FC33	1	MOTOROLA	PQFP132
U51		95300082	CIRCUIT INTEGRE	DSP56001-FC33	1	MOTOROLA	PQFP132
U52	2m	95300177	CIRCUIT INTEGRE	74FCT521ASO	1	IDT	SO20L
U54	2m	95300178	CIRCUIT INTEGRE	74FCT574ASO	1	TEXAS	SO20L
U55	1m	95300085	CIRCUIT INTEGRE	XC3042-100PQ100C	1	XILINX	PQFP100
U56	2m	95300177	CIRCUIT INTEGRE	74FCT521ASO	1	IDT	SO20L
U57		95300082	CIRCUIT INTEGRE	DSP56001-FC33	1	MOTOROLA	PQFP132
U59		95300093	CIRCUIT INTEGRE	PAL22V10H-15PC	1	ADVANCED	DIP24 Et
U59	3a	00010130	PROGRAMME	"MCTRLBUS2"	1		
U60		95300082	CIRCUIT INTEGRE	DSP56001-FC33	1	MOTOROLA	PQFP132
U61	6m	95300090	CIRCUIT INTEGRE	71256-L35Y	1	IDT	SSOP28
U62	6m	95300090	CIRCUIT INTEGRE	71256-L35Y	1	IDT	SSOP28
U63	2m	95300179	CIRCUIT INTEGRE	74FCT833BSO	1	IDT	SO24L
U65		95300082	CIRCUIT INTEGRE	DSP56001-FC33	1	MOTOROLA	PQFP132
U67	2m	95300179	CIRCUIT INTEGRE	74FCT833BSO	1	IDT	SO24L
U68		95360202	CIRCUIT INTEGRE	PAL16R4-7	1		DIP20
U68	3a	00010041	PROGRAMME	"MSONRD"	1		DIP20
U70		95360202	CIRCUIT INTEGRE	PAL16R4-7	1		DIP20
U70	3a	00010042	PROGRAMME	"MSONWR"	1		DIP20
U72		95360203	CIRCUIT INTEGRE	DS1000M-60	1		DIP8
U74	1m	95300097	CIRCUIT INTEGRE	XC3042-125PQ100C	1	XILINX	PQFP100
U75		95300093	CIRCUIT INTEGRE	PAL22V10H-15PC	1	ADVANCED	DIP24 Et
U75	3a	00010130	PROGRAMME	"MCTRLBUS2"	1		
U79		95360201	CIRCUIT INTEGRE	74AS250	1		DIP24 Et
U80	2m	95300179	CIRCUIT INTEGRE	74FCT833BSO	1	IDT	SO24L
U81	2m	95300179	CIRCUIT INTEGRE	74FCT833BSO	1	IDT	SO24L
U82	2m	95300179	CIRCUIT INTEGRE	74FCT833BSO	1	IDT	SO24L
U84		95300098	CIRCUIT INTEGRE	MAX9685CPE	1	MAXIM	DIP16
U85		95300106	CIRCUIT INTEGRE	PC 74HC85T	1	PHILIPS	SO16
U88	1m	95300085	CIRCUIT INTEGRE	XC3042-100PQ100C	1	XILINX	PQFP100
U89		95300098	CIRCUIT INTEGRE	MAX9685CPE	1	MAXIM	DIP16
U90		95300098	CIRCUIT INTEGRE	MAX9685CPE	1	MAXIM	DIP16
U91	2m	95300084	CIRCUIT INTEGRE	AM7969-125PC	1	AMD	DIP28
U94	2m	95300098	CIRCUIT INTEGRE	MAX9685 CPE	1	MAXIM	DIP16
U97		95300106	CIRCUIT INTEGRE	SN 74HC85T	1	PHILIPS	SO16
U100	4m	95300091	CIRCUIT INTEGRE	7200-LA25J	1	IDT	PLCC32
U101	4m	95300091	CIRCUIT INTEGRE	7200-LA25J	1	IDT	PLCC32
U102		94420255	BNC COUDE 75 OHMS	54-21-2031	1	STUDER	
U103		94420255	BNC COUDE 75 OHMS	54-21-2031	1	STUDER	
U104		95300082	CIRCUIT INTEGRE	DSP56001-FC33	1	MOTOROLA	PQFP132
U106		95300084	CIRCUIT INTEGRE	AM7969-125PC	1	AMD	
U107	4m	95300091	CIRCUIT INTEGRE	7200-LA25J	1	IDT	PLCC32
U108		95300088	CIRCUIT INTEGRE	7130-LA35J	1	IDT	PLCC52
U109		95300088	CIRCUIT INTEGRE	7130-LA35J	1	IDT	PLCC52
U110	4m	95300091	CIRCUIT INTEGRE	7200-LA25J	1	IDT	PLCC32
U111		95300088	CIRCUIT INTEGRE	7130-LA35J	1	IDT	PLCC52
U112		95300088	CIRCUIT INTEGRE	7130-LA35J	1	IDT	PLCC52
U113	4m	95300091	CIRCUIT INTEGRE	7200-LA25J	1	IDT	PLCC32
U126		94420255	BNC COUDE 75 OHMS	54-21-2031	1	STUDER	
U128	5m				1		
U129		94420255	BNC COUDE 75 HOMS	54-21-2031	1	STUDER	
U132		95300095	CIRCUIT INTEGRE	MAX660CPA	1	MAXIM	DIP8
U133		95300088	CIRCUIT INTEGRE	7130-LA35J	1	IDT	PLCC52
U134		95300088	CIRCUIT INTEGRE	7130-LA35J	1	IDT	PLCC52
U135		95300088	CIRCUIT INTEGRE	7130-LA35J	1	IDT	PLCC52
U136		95300088	CIRCUIT INTEGRE	7130-LA35J	1	IDT	PLCC52
U137		95161075	CIRCUIT INTEGRE	5082-7730	1	HP	DIP14
U138	2m	95300108	CIRCUIT INTEGRE	PC 74HC123T	1	PHILIPS	SO16
U140	1a	95366000	CIRCUIT INTEGRE	74LS244	1		DIP20
USR1		94540008	ROUE CODEUSE	422055	1	HOPT-SHU	
V1		98230043	POIGNEE EXTRACTEUR	HAUTE REF: 131177	0.1	SEEM	
V2		98230044	POIGNEE EXTRACTEUR	BASSE REF: 131178	0.1	SEEM	
V3	2m	97613203	VIS V106	F/90 M2,5X6	10		
V4		97612202	VIS V126	M2,5X5	2		
V5	2m	97612205	VIS V126	M2,5X8	9		
V6		97715007	RONDELLE V151	MU 2,5	2		
V7		98230045	OEILLET + VIS	REF: 492959	0.02		
V8		94336008	SUPPORT COUDE 14Pts	A14-LED-H	1	ANTELEC	
V9		94330007	SUPPORT LED	AST0035-9660	14	SHURTER	
V10	1m	94320003	CAVALIER FEM. ISOLE	313-1731-0-00-406	8	COMATEL	
V11		94480308	SUPPORT 28Pts LARGE		1		
V12		94480313	SUPPORT 24Pts ETROIT		11		
V13	1m	94480305	SUPPORT 20Pts		4		
V14	1m	94480301	SUPPORT 8Pts		2		
V15		94480303	SUPPORT 16Pts		1		
V16		94480034	SUPPORT COUDE 8Pts	(6Pts UTILES)	1	ANTELEC	
V17	1a	94480302	SUPPORT 14Pts		1		
V18	1a	97880003	ENTRETOISE EXALIS 4	LONGUEUR 5mm	6	ACCEL	
V19	1a	94480023	VERROUILLAGE FEMELLE	8630-01-060	2	SOURIAU	
V20	2m	97718000	ENTRETOISE LISSE	ø3 L1,5 ACIER	7		
V21	2m	97610011	ENTRETOISE ENNÊT 19	LONGUEUR 12	7	ACCEL	
V22	1a	97613213	VIS	F/90 M2,5X25	1		
V23	2a	97713006	ECROU	M2,5	1		
V24	3a	97110039	BOUCHE TROU METAL	7603	2	KEYSTONE	
U2			CIRCUIT INTEGRE	SCAN 18245T SSC	1	NS	SSOP56
U5			CIRCUIT INTEGRE	SN 74ABT16245 DL	1	TEXAS	SSOP48
U7			CIRCUIT INTEGRE	74FCT652ATSO	1	IDT	SO24L
U9			CIRCUIT INTEGRE	74F280SC	1	NATIONAL	SO14
U11			CIRCUIT INTEGRE	74FCT652ATSO	1	IDT	SO24L
U13			CIRCUIT INTEGRE	74F280SC	1	NATIONAL	SO14
U14			CIRCUIT INTEGRE	74FCT652ATSO	1	IDT	SO24L
U26			CIRCUIT INTEGRE	74FCT652ATSO	1	IDT	SO24L
U27			CIRCUIT INTEGRE	74FCT652ATSO	1	IDT	SO24L
U30			CIRCUIT INTEGRE	74F138SC	1	NATIONAL	SO16
U31			CIRCUIT INTEGRE	74FCT652ATSO	1	IDT	SO24L
U34			CIRCUIT INTEGRE	74FCT245ASO	1	IDT	SO20L
U35			CIRCUIT INTEGRE	SN 74ABT16244DL	1	TEXAS	SSOP48
U36			CIRCUIT INTEGRE	74F280SC	1	NATIONAL	SO14
U37			CIRCUIT INTEGRE	74F280SC	1	NATIONAL	SO14
U38			CIRCUIT INTEGRE	74F280SC	1	NATIONAL	SO14
U40			CIRCUIT INTEGRE	74F280SC	1	NATIONAL	SO14
U53			CIRCUIT INTEGRE	74FCT652ATSO	1	IDT	SO24L
U58			CIRCUIT INTEGRE	SCAN 18374T SSC	1	NS	SSOP56
U64			CIRCUIT INTEGRE	74FCT652ATSO	1	IDT	SO24L
U66			CIRCUIT INTEGRE	74FCT652ATSO	1	IDT	SO24L
U69			CIRCUIT INTEGRE	74FCT652ATSO	1	IDT	SO24L
U71			CIRCUIT INTEGRE	74FCT821BSO	1	IDT	SO24L
U73			CIRCUIT INTEGRE	74FCT821BSO	1	IDT	SO24L
U76			CIRCUIT INTEGRE	74FCT821BSO	1	IDT	SO24L
U77			CIRCUIT INTEGRE	74FCT821BSO	1	IDT	SO24L
U78			CIRCUIT INTEGRE	74FCT821BSO	1	IDT	SO24L
U83			CIRCUIT INTEGRE	SCAN 18374T SSC	1	NS	SSOP56
U86			CIRCUIT INTEGRE	74FCT652ATSO	1	IDT	SO24L
U87			CIRCUIT INTEGRE	SN 74ABT16244DL	1	TEXAS	SSOP48
U92			CIRCUIT INTEGRE	SCAN 18374T SSC	1	NS	SSOP56
U93			CIRCUIT INTEGRE	SCAN 18374T SSC	1	NS	SSOP56
U95			CIRCUIT INTEGRE	SN 74ABT16245DL	1	TEXAS	SSOP48
U96			CIRCUIT INTEGRE	SCAN 18245T SSC	1	NS	SSOP56
U98			CIRCUIT INTEGRE	74F280SC	1	NATIONAL	SO14
U99			CIRCUIT INTEGRE	74F280SC	1	NATIONAL	SO14
U105			CIRCUIT INTEGRE	7406	1		SO14
U114			CIRCUIT INTEGRE	7130-LA45J	1	IDT	PLCC52
U115			CIRCUIT INTEGRE	7130-LA45J	1	IDT	PLCC52
U116			CIRCUIT INTEGRE	7130-LA45J	1	IDT	PLCC52
U117			CIRCUIT INTEGRE	7130-LA45J	1	IDT	PLCC52
U118			CIRCUIT INTEGRE	7130-LA45J	1	IDT	PLCC52
U119			CIRCUIT INTEGRE	SN 74ABT16245DL	1	TEXAS	SSOP48
U120			CIRCUIT INTEGRE	7130-LA45J	1	IDT	PLCC52
U121			CIRCUIT INTEGRE	7130-LA45J	1	IDT	PLCC52
U122			CIRCUIT INTEGRE	7130-LA45J	1	IDT	PLCC52
U123			CIRCUIT INTEGRE	SCAN 18245T SSC	1	NS	SSOP56
U124			CIRCUIT INTEGRE	74F138SC	1	TEXAS	SO16
U125			CIRCUIT INTEGRE	SCAN 18245T SSC	1	NS	SSOP56
U127	1s		CIRCUIT INTEGRE	SN 74ABT16244DL	0	TEXAS	SSOP48
U130	1m		CIRCUIT INTEGRE	74FCT157ATSO	1	IDT	SO16L
U131	1m		CIRCUIT INTEGRE	74FCT157ATSO	1	IDT	SO16L
U139	1m		CIRCUIT INTEGRE	74FCT157ATSO	1	IDT	SO16L
U200	1m		CIRCUIT INTEGRE	74FCT157ATSO	1	IDT	SO16L
SW12			PONT SOUDURE		1		
SW13			PONT SOUDURE		1		
SW14			PONT SOUDURE		1		
SW15			PONT SOUDURE		1		
SW16			PONT SOUDURE		1		
SW20			PONT SOUDURE		1		
SW21			PONT SOUDURE		1		
SW22			PONT SOUDURE		1		
C1	1m		CONDENSATEUR 2C1	10 nF 20%	1		1206
C2	1m		CONDENSATEUR 2C1	10 nF 20%	1		1206
C3	1m		CONDENSATEUR 2C1	10 nF 20%	1		1206
C4	1m		CONDENSATEUR 2C1	10 nF 20%	1		1206
C5	1m		CONDENSATEUR 2C1	10 nF 20%	1		1206
C6	1m		CONDENSATEUR 2C1	10 nF 20%	1		1206
C7	1m		CONDENSATEUR 2C1	10 nF 20%	1		1206
C8	1m		CONDENSATEUR 2C1	10 nF 20%	1		1206
C9	1m		CONDENSATEUR 2C1	10 nF 20%	1		1206
C10	1m		CONDENSATEUR 2C1	10 nF 20%	1		1206
C11	1m		CONDENSATEUR 2C1	33pF 20%	1		1206
C12	1m		CONDENSATEUR 2C1	10 nF 20%	1		1206
C13	1m		CONDENSATEUR 2C1	10 nF 20%	1		1206
C14	1m		CONDENSATEUR 2C1	33pF 20%	1		1206
C15	1m		CONDENSATEUR 2C1	10 nF 20%	1		1206
C16	1m		CONDENSATEUR 2C1	1nF 20%	1		1206
C17			CONDENSATEUR 2C1	47nF 20%	1		1206
C18	1m		CONDENSATEUR 2C1	10 nF 20%	1		1206
C19	1m		CONDENSATEUR 2C1	10 nF 20%	1		1206
C20	1m		CONDENSATEUR 2C1	10 nF 20%	1		1206

Optical Madisoni 2 Madi Input Board 42.125.303.01
Coax Madisoni 2 Madi Input Board 42.125.303.11

REPERE	IND	COMPOSANT	DESIGNATION	VALEUR	QTE	FABRIQ.	BOITIER
C29	1m		CONDENSATEUR 2C1	1nF 20%	1		1206
C30	1m		CONDENSATEUR 2C1	10 nF 20%	1		1206
C31	1m		CONDENSATEUR 2C1	10 nF 20%	1		1206
C32	1m		CONDENSATEUR 2C1	10 nF 20%	1		1206
C33	1m		CONDENSATEUR 2C1	10 nF 20%	1		1206
C34	1m		CONDENSATEUR 2C1	10 nF 20%	1		1206
C35	1m		CONDENSATEUR 2C1	10 nF 20%	1		1206
C36	2m		CONDENSATEUR 293D	47 µF 10V	1	SPRAGUE	CASE D
C37	1m		CONDENSATEUR 2C1	10 nF 20%	1		1206
C38	2m		CONDENSATEUR 293D	47 µF 10V	1	SPRAGUE	CASE D
C39	1m		CONDENSATEUR 2C1	10 nF 20%	1		1206
C40	1m		CONDENSATEUR 2C1	10nF 20%	1		1206
C41	1m		CONDENSATEUR 2C1	10 nF 20%	1		1206
C42	1m		CONDENSATEUR 2C1	10 nF 20%	1		1206
C43	1m		CONDENSATEUR 2C1	10 nF 20%	1		1206
C44	1m		CONDENSATEUR 2C1	10 nF 20%	1		1206
C45	1m		CONDENSATEUR 2C1	10 nF 20%	1		1206
C46	1m		CONDENSATEUR 2C1	10 nF 20%	1		1206
C47	1m		CONDENSATEUR 2C1	10 nF 20%	1		1206
C48	1m		CONDENSATEUR 2C1	47nF 20%	1		1206
C49			CONDENSATEUR 2C1	100nF 20%	1		1206
C50	1m		CONDENSATEUR 2C1	10 nF 20%	1		1206
C51	1m		CONDENSATEUR 2C1	10 nF 20%	1		1206
C52			CONDENSATEUR 2C1	100nF 20%	1		1206
C53			CONDENSATEUR 2C1	1nF 20%	1		1206
C54			CONDENSATEUR 2C1	1nF 20%	1		1206
C55	1m		CONDENSATEUR 2C1	10 nF 20%	1		1206
C56	1m		CONDENSATEUR 2C1	10 nF 20%	1		1206
C57			CONDENSATEUR 2C1	100nF 20%	1		1206
C58	1m		CONDENSATEUR 2C1	10 nF 20%	1		1206
C59	1m		CONDENSATEUR 2C1	10 nF 20%	1		1206
C60	1m		CONDENSATEUR 2C1	10 nF 20%	1		1206
C61			CONDENSATEUR 2C1	1nF 20%	1		1206
C62			CONDENSATEUR 2C1	100nF 20%	1		1206
C63			CONDENSATEUR 293D	1µF 16V	1	SPRAGUE	CASE A
C64	1m		CONDENSATEUR 2C1	10 nF 20%	1		1206
C65	1m		CONDENSATEUR 2C1	10 nF 20%	1		1206
C66			CONDENSATEUR 293D	1µF 16V	1	SPRAGUE	CASE A
C67			CONDENSATEUR 2C1	100nF 20%	1		1206
C68	1m		CONDENSATEUR 2C1	10 nF 20%	1		1206
C69	1m		CONDENSATEUR 2C1	10 nF 20%	1		1206
C70	1m		CONDENSATEUR NPO	39pF 5%	1		1206
C71	1m		CONDENSATEUR 2C1	10 nF 20%	1		1206
C72	1m		CONDENSATEUR 2C1	10 nF 20%	1		1206
C73	1m		CONDENSATEUR NPO	39pF 5%	1		1206
C75	2m		CONDENSATEUR 293D	10µF 35V	1	SPRAGUE	CASE D
C77			CONDENSATEUR 2C1	100nF 20%	1		1206
C79			CONDENSATEUR 2C1	100nF 20%	1		1206
C80			CONDENSATEUR 2C1	1nF 20%	1		1206
C81	1m		CONDENSATEUR 2C1	10 nF 20%	1		1206
C82	1m		CONDENSATEUR 2C1	10 nF 20%	1		1206
C83	1m		CONDENSATEUR 2C1	10 nF 20%	1		1206
C84	1m		CONDENSATEUR 2C1	10 nF 20%	1		1206
C85			CONDENSATEUR 2C1	1nF 20%	1		1206
C86			CONDENSATEUR 2C1	100nF 20%	1		1206
C87			CONDENSATEUR 2C1	1nF 20%	1		1206
C88			CONDENSATEUR 2C1	100nF 20%	1		1206
C89	2m		CONDENSATEUR 293D	47 µF 10V	1	SPRAGUE	CASE D
C90	2m		CONDENSATEUR 293D	47 µF 10V	1	SPRAGUE	CASE D
C91	1m		CONDENSATEUR 2C1	10 nF 20%	1		1206
C92	1m		CONDENSATEUR 2C1	10 nF 20%	1		1206
C93	1m		CONDENSATEUR 2C1	10 nF 20%	1		1206
C94	1m		CONDENSATEUR 2C1	10 nF 20%	1		1206
C95			CONDENSATEUR 2C1	1nF 20%	1		1206
C96	1m		CONDENSATEUR 2C1	1nF 20%	1		1206
C97	1m		CONDENSATEUR 2C1	10 nF 20%	1		1206
C98	1m		CONDENSATEUR 2C1	10 nF 20%	1		1206
C99	1m		CONDENSATEUR 2C1	10 nF 20%	1		1206
C100	1m		CONDENSATEUR 2C1	47nF 20%	1		1206
C101	1m		CONDENSATEUR 2C1	10nF 20%	1		1206
C102			CONDENSATEUR 2C1	47nF 20%	1		1206
C103			CONDENSATEUR 2C1	3.3nF 20%	1		1206
C104	1m		CONDENSATEUR 2C1	47nF 20%	1		1206
C105	1m		CONDENSATEUR 2C1	1nF 20%	1		1206
C106	1m		CONDENSATEUR 2C1	47nF 20%	1		1206
C107	1m		CONDENSATEUR 2C1	10 nF 20%	1		1206
C108	1m		CONDENSATEUR 2C1	1nF 20%	1		1206
C109	1m		CONDENSATEUR 2C1	47nF 20%	1		1206
C111	2m		CONDENSATEUR 293D	47 µF 10V	1	SPRAGUE	CASE D
C112	1m		CONDENSATEUR 2C1	47nF 20%	1		1206
C113			CONDENSATEUR 2C1	100nF 20%	1		1206
C114	2m		CONDENSATEUR 293D	47 µF 10V	1	SPRAGUE	CASE D
C115			CONDENSATEUR 2C1	100nF 20%	1		1206
C116			CONDENSATEUR 2C1	1nF 20%	1		1206
C117			CONDENSATEUR 2C1	1nF 20%	1		1206
C118			CONDENSATEUR 2C1	100nF 20%	1		1206
C119			CONDENSATEUR 2C1	1nF 20%	1		1206
C120			CONDENSATEUR 2C1	100nF 20%	1		1206
C121			CONDENSATEUR 2C1	100nF 20%	1		1206
C122			CONDENSATEUR 293D	1µF 16V	1	SPRAGUE	CASE A
C123			CONDENSATEUR 293D	1µF 16V	1	SPRAGUE	CASE A
C124	1m		CONDENSATEUR NPO	39pF 5%	1		1206
C125	1m		CONDENSATEUR NPO	39pF 5%	1		1206
C126	2m		CONDENSATEUR 293D	10µF 35V	1	SPRAGUE	CASE D
C127			CONDENSATEUR 2C1	100nF 20%	1		1206
C128			CONDENSATEUR 2C1	100nF 20%	1		1206
C129			CONDENSATEUR 2C1	1nF 20%	1		1206
C130			CONDENSATEUR 2C1	1nF 20%	1		1206
C131			CONDENSATEUR 2C1	100nF 20%	1		1206
C132			CONDENSATEUR 2C1	1nF 20%	1		1206
C133			CONDENSATEUR 2C1	100nF 20%	1		1206
C134			CONDENSATEUR 2C1	1nF 20%	1		1206
C135	1m		CONDENSATEUR 2C1	1nF 20%	1		1206
C136	1m		CONDENSATEUR 2C1	47nF 20%	1		1206
C137	2m		CONDENSATEUR 293D	10µF 35V	1	SPRAGUE	CASE D
C138			CONDENSATEUR 2C1	3.3nF 20%	1		1206
C139			CONDENSATEUR 2C1	100nF 20%	1		1206
C140	1m		CONDENSATEUR 2C1	47nF 20%	1		1206
C141	1m		CONDENSATEUR 2C1	1nF 20%	1		1206
C142	1m		CONDENSATEUR 2C1	47nF 20%	1		1206
C143	1m		CONDENSATEUR 2C1	1nF 20%	1		1206
C144	1m		CONDENSATEUR 2C1	47nF 20%	1		1206
C145	1m		CONDENSATEUR 2C1	1nF 20%	1		1206
C146	1m		CONDENSATEUR 293D	47µF 10V	1	SPRAGUE	CASE D
C147	1m		CONDENSATEUR 293D	47µF 10V	1	SPRAGUE	CASE D
C148	1m		CONDENSATEUR 2C1	33pF 20%	1		1206
C149	1m		CONDENSATEUR 2C1	33pF 20%	1		1206
C150	1m		CONDENSATEUR 2C1	33pF 20%	1		1206
C151	1m		CONDENSATEUR 2C1	33pF 20%	1		1206
C152			CONDENSATEUR 2C1	100nF 20%	1		1206
C153	2s		CONDENSATEUR 2C1	100nF 20%	0		1206
C154	1m		CONDENSATEUR 2C1	10 nF 20%	1		1206
C155	1m		CONDENSATEUR 2C1	10 nF 20%	1		1206
C156	1m		CONDENSATEUR 2C1	10 nF 20%	1		1206
C157	1m		CONDENSATEUR 2C1	10 nF 20%	1		1206
C158	1m		CONDENSATEUR 2C1	10 nF 20%	1		1206
C159	1m		CONDENSATEUR 2C1	10 nF 20%	1		1206
C160	1m		CONDENSATEUR 2C1	10 nF 20%	1		1206
C161	1m		CONDENSATEUR 2C1	10 nF 20%	1		1206
C162	1m		CONDENSATEUR 2C1	10 nF 20%	1		1206
C163	1m		CONDENSATEUR 2C1	10 nF 20%	1		1206
C164	1m		CONDENSATEUR 2C1	10 nF 20%	1		1206
C165	1m		CONDENSATEUR 2C1	10 nF 20%	1		1206
C166	1m		CONDENSATEUR 2C1	10 nF 20%	1		1206
C167	1m		CONDENSATEUR 2C1	10 nF 20%	1		1206
C168	1m		CONDENSATEUR 2C1	10 nF 20%	1		1206
C169	1m		CONDENSATEUR 2C1	10 nF 20%	1		1206
C170	1m		CONDENSATEUR 2C1	10 nF 20%	1		1206
C171	1m		CONDENSATEUR 2C1	10 nF 20%	1		1206
C172	1m		CONDENSATEUR 2C1	10 nF 20%	1		1206
C173	1m		CONDENSATEUR 2C1	10 nF 20%	1		1206
C174	1m		CONDENSATEUR 2C1	10 nF 20%	1		1206
C175	1m		CONDENSATEUR 2C1	10 nF 20%	1		1206
C176	1m		CONDENSATEUR 2C1	10 nF 20%	1		1206
C177	1m		CONDENSATEUR 2C1	10 nF 20%	1		1206
C178	1m		CONDENSATEUR 2C1	10 nF 20%	1		1206
C179	1m		CONDENSATEUR 2C1	10 nF 20%	1		1206
C180	1m		CONDENSATEUR 2C1	10 nF 20%	1		1206
C181	1m		CONDENSATEUR 2C1	10 nF 20%	1		1206
C182	1m		CONDENSATEUR 2C1	10 nF 20%	1		1206
C183	1m		CONDENSATEUR 2C1	10 nF 20%	1		1206
C184	1m		CONDENSATEUR 2C1	10 nF 20%	1		1206
C185	1m		CONDENSATEUR 2C1	10 nF 20%	1		1206
C186	1m		CONDENSATEUR 2C1	10 nF 20%	1		1206
C187	1m		CONDENSATEUR 2C1	10 nF 20%	1		1206
C188	1m		CONDENSATEUR 2C1	10 nF 20%	1		1206
C189	1m		CONDENSATEUR 2C1	10 nF 20%	1		1206
C190	1m		CONDENSATEUR 2C1	10 nF 20%	1		1206
C191	1m		CONDENSATEUR 2C1	10 nF 20%	1		1206
C192	1m		CONDENSATEUR 2C1	10 nF 20%	1		1206
C193	1m		CONDENSATEUR 2C1	10 nF 20%	1		1206
C194	1m		CONDENSATEUR 2C1	10 nF 20%	1		1206
C195	1m		CONDENSATEUR 2C1	10 nF 20%	1		1206
C196	1m		CONDENSATEUR 2C1	10 nF 20%	1		1206
C197	1m		CONDENSATEUR 2C1	10 nF 20%	1		1206
C198	1m		CONDENSATEUR 2C1	10 nF 20%	1		1206
C199	1m		CONDENSATEUR 2C1	10 nF 20%	1		1206
C200	1m		CONDENSATEUR 2C1	10 nF 20%	1		1206
C201	1m		CONDENSATEUR 2C1	10 nF 20%	1		1206
C202	1m		CONDENSATEUR 2C1	10 nF 20%	1		1206
C203	1m		CONDENSATEUR 2C1	10 nF 20%	1		1206
C204	2m		CONDENSATEUR 293D	47 µF 10V	1	SPRAGUE	CASE D
C205	2m		CONDENSATEUR 293D	47 µF 10V	1	SPRAGUE	CASE D
C206	2m		CONDENSATEUR 293D	47 µF 10V	1	SPRAGUE	CASE D
C207	2m		CONDENSATEUR 293D	47 µF 10V	1	SPRAGUE	CASE D
C210	1m		CONDENSATEUR 2C1	100nF 20%	1		1206

Optical Madisoni 2 Madi Input Board 42.125.303.01
Coax Madisoni 2 Madi Input Board 42.125.303.11

REPERE	IND	COMPOSANT	DESIGNATION	VALEUR	QTE	FABRIQ.	BOITIER
C211	2s		CONDENSATEUR 2C1	100nF 20%	0		1206
C212			CONDENSATEUR 2C1	100nF 20%	1		1206
C213	2m		CONDENSATEUR 293D	47 µF 10V	1	SPRAGUE	CASE D
C214	2m		CONDENSATEUR 293D	47 µF 10V	1	SPRAGUE	CASE D
C215	1m		CONDENSATEUR 2C1	10nF 20%	1		1206
C216	1m		CONDENSATEUR 2C1	47nF 20%	1		1206
C217	1m		CONDENSATEUR 2C1	1nF 20%	1		1206
C222	1m		CONDENSATEUR 2C1	1nF 20%	1		1206
C223	1m		CONDENSATEUR 2C1	1nF 20%	1		1206
C224	1m		CONDENSATEUR 2C1	47nF 20%	1		1206
C228	1m		CONDENSATEUR 2C1	10nF 20%	1		1206
C229			CONDENSATEUR 2C1	100nF 20%	1		1206
C230	2m		CONDENSATEUR 293D	10µF 35V	1	SPRAGUE	CASE D
C231	2m		CONDENSATEUR 293D	10µF 35V	1	SPRAGUE	CASE D
C232			CONDENSATEUR 2C1	100nF 20%	1		1206
C233	2a		CONDENSATEUR 2C1	10nF 20%	1		1206
C234	1a		CONDENSATEUR 2C1	100nF 20%	1		1206
C235	1a		CONDENSATEUR 2C1	100nF 20%	1		1206
C236	1a		CONDENSATEUR 2C1	100nF 20%	1		1206
C237	1a		CONDENSATEUR 2C1	100nF 20%	1		1206
C238	1a		CONDENSATEUR 2C1	100nF 20%	1		1206
C239	1a		CONDENSATEUR 2C1	100nF 20%	1		1206
C240	1a		CONDENSATEUR 2C1	100nF 20%	1		1206
C241	1a		CONDENSATEUR 2C1	100nF 20%	1		1206
C300			CONDENSATEUR 2C1	100nF 20%	1		1206
C301			CONDENSATEUR 2C1	100nF 20%	1		1206
C302			CONDENSATEUR 2C1	100nF 20%	1		1206
C303			CONDENSATEUR 2C1	100nF 20%	1		1206
C304	2m		CONDENSATEUR 293D	47 µF 10V	1	SPRAGUE	CASE D
C305	2m		CONDENSATEUR 293D	47 µF 10V	1	SPRAGUE	CASE D
C306			CONDENSATEUR 2C1	100nF 20%	1		1206
C307	2m		CONDENSATEUR 293D	47 µF 10V	1	SPRAGUE	CASE D
C308	2m		CONDENSATEUR 293D	47 µF 10V	1	SPRAGUE	CASE D
C309	2m		CONDENSATEUR 293D	47 µF 10V	1	SPRAGUE	CASE D
C310	2m		CONDENSATEUR 293D	47 µF 10V	1	SPRAGUE	CASE D
C311	2m		CONDENSATEUR 293D	47 µF 10V	1	SPRAGUE	CASE D
C312	2m		CONDENSATEUR 293D	47 µF 10V	1	SPRAGUE	CASE D
C313	2m		CONDENSATEUR 293D	47 µF 10V	1	SPRAGUE	CASE D
C314	2m		CONDENSATEUR 293D	47 µF 10V	1	SPRAGUE	CASE D
R1			RESISTANCE	75Ω 1% 1/8W	1		1206
R2	1m		RESISTANCE	330Ω 1% 1/8W	1		1206
R3			RESISTANCE	1.2K 1% 1/8W	1		1206
R4			RESISTANCE	75Ω 1% 1/8W	1		1206
R5			RESISTANCE	75Ω 1% 1/8W	1		1206
R6			RESISTANCE	330Ω 1% 1/8W	1		1206
R7	1m		RESISTANCE	10K 1% 1/8W	1		1206
R8	1m		RESISTANCE	1K 1% 1/8W	1		1206
R9	1m		RESISTANCE	220Ω 1% 1/8W	1		1206
R10			RESISTANCE	75Ω 1% 1/8W	1		1206
R11	1m		RESISTANCE	1K 1% 1/8W	1		1206
R12			RESISTANCE	1.2K 1% 1/8W	1		1206
R13			RESISTANCE	75Ω 1% 1/8W	1		1206
R14			RESISTANCE	75Ω 1% 1/8W	1		1206
R15			RESISTANCE	330Ω 1% 1/8W	1		1206
R16	1m		RESISTANCE	4.75K 1% 1/8W	1		1206
R17			RESISTANCE	220Ω 1% 1/8W	1		1206
R18			RESISTANCE	330Ω 1% 1/8W	1		1206
R19	2a		RESISTANCE	1K 1% 1/8W	1		1206
R20			RESISTANCE	330Ω 1% 1/8W	1		1206
R21			RESISTANCE	75Ω 1% 1/8W	1		1206
R22			RESISTANCE	100Ω 1% 1/8W	1		1206
R23			RESISTANCE	100Ω 1% 1/8W	1		1206
R24	1m		RESISTANCE	9.76K 1% 1/8W	1		1206
R25	1m		RESISTANCE	1K 1% 1/8W	1		1206
R26			RESISTANCE	330Ω 1% 1/8W	1		1206
R27	2a		RESISTANCE	1K 1% 1/8W	1		1206
R28			RESISTANCE	330Ω 1% 1/8W	1		1206
R29			RESISTANCE	75Ω 1% 1/8W	1		1206
R30			RESISTANCE	100Ω 1% 1/8W	1		1206
R31	1m		RESISTANCE	56,2Ω 1% 1/8W	1		1206
R32	2a		RESISTANCE	1K 1% 1/8W	1		1206
R35			RESISTANCE	100Ω 1% 1/8W	1		1206
R37	1m		RESISTANCE	220Ω 1% 1/8W	1		1206
R38	1m		RESISTANCE	330Ω 1% 1/8W	1		1206
R40	1m		RESISTANCE	56,2Ω 1% 1/8W	1		1206
R41	1m		RESISTANCE	220Ω 1% 1/8W	1		1206
R42	1m		RESISTANCE	330Ω 1% 1/8W	1		1206
R44	1m		RESISTANCE	1K 1% 1/8W	1		1206
R50	1m		RESISTANCE	1K 1% 1/8W	1		1206
R51	1m		RESISTANCE	1K 1% 1/8W	1		1206
R52	1m		RESISTANCE	1.5K 1% 1/8W	1		1206
R53	1m		RESISTANCE	1.5K 1% 1/8W	1		1206
R54	1m		RESISTANCE	56,2Ω 1% 1/8W	1		1206
R55	1m		RESISTANCE	220Ω 1% 1/8W	1		1206
R56	1m		RESISTANCE	330Ω 1% 1/8W	1		1206
R57	1m		RESISTANCE	56,2Ω 1% 1/8W	1		1206
R58	1m		RESISTANCE	220Ω 1% 1/8W	1		1206
R59	1m		RESISTANCE	330Ω 1% 1/8W	1		1206
R60	1m		RESISTANCE	56,2Ω 1% 1/8W	1		1206
R61	1m		RESISTANCE	220Ω 1% 1/8W	1		1206
R62	1m		RESISTANCE	330Ω 1% 1/8W	1		1206
R63	1m		RESISTANCE	56,2Ω 1% 1/8W	1		1206
R64	1m		RESISTANCE	220Ω 1% 1/8W	1		1206
R65			RESISTANCE	82,5Ω 1% 1/8W	1		1206
R66			RESISTANCE	82,5Ω 1% 1/8W	1		1206
R67			RESISTANCE	130Ω 1% 1/8W	1		1206
R68			RESISTANCE	130Ω 1% 1/8W	1		1206
R69			RESISTANCE	82,5Ω 1% 1/8W	1		1206
R70			RESISTANCE	82,5Ω 1% 1/8W	1		1206
R71			RESISTANCE	130Ω 1% 1/8W	1		1206
R72	1m		RESISTANCE	130Ω 1% 1/8W	1		1206
R75			RESISTANCE	75Ω 1% 1/8W	1		1206
R76			RESISTANCE	75Ω 1% 1/8W	1		1206
R77	1a		RESISTANCE	1K 1% 1/8W	1		1206
R78	1a		RESISTANCE	1K 1% 1/8W	1		1206

SCHEMATA / CIRCUIT DIAGRAMS

Optical Madisono 2 Madi Output Board 42.125.304.01

Coax Madisono 2 Madi Output Board 42.125.304.11

Optical Madisono 2 Madi Output Board 42.125.304.01
Coax Madisono 2 Madi Output Board 42.125.304.11

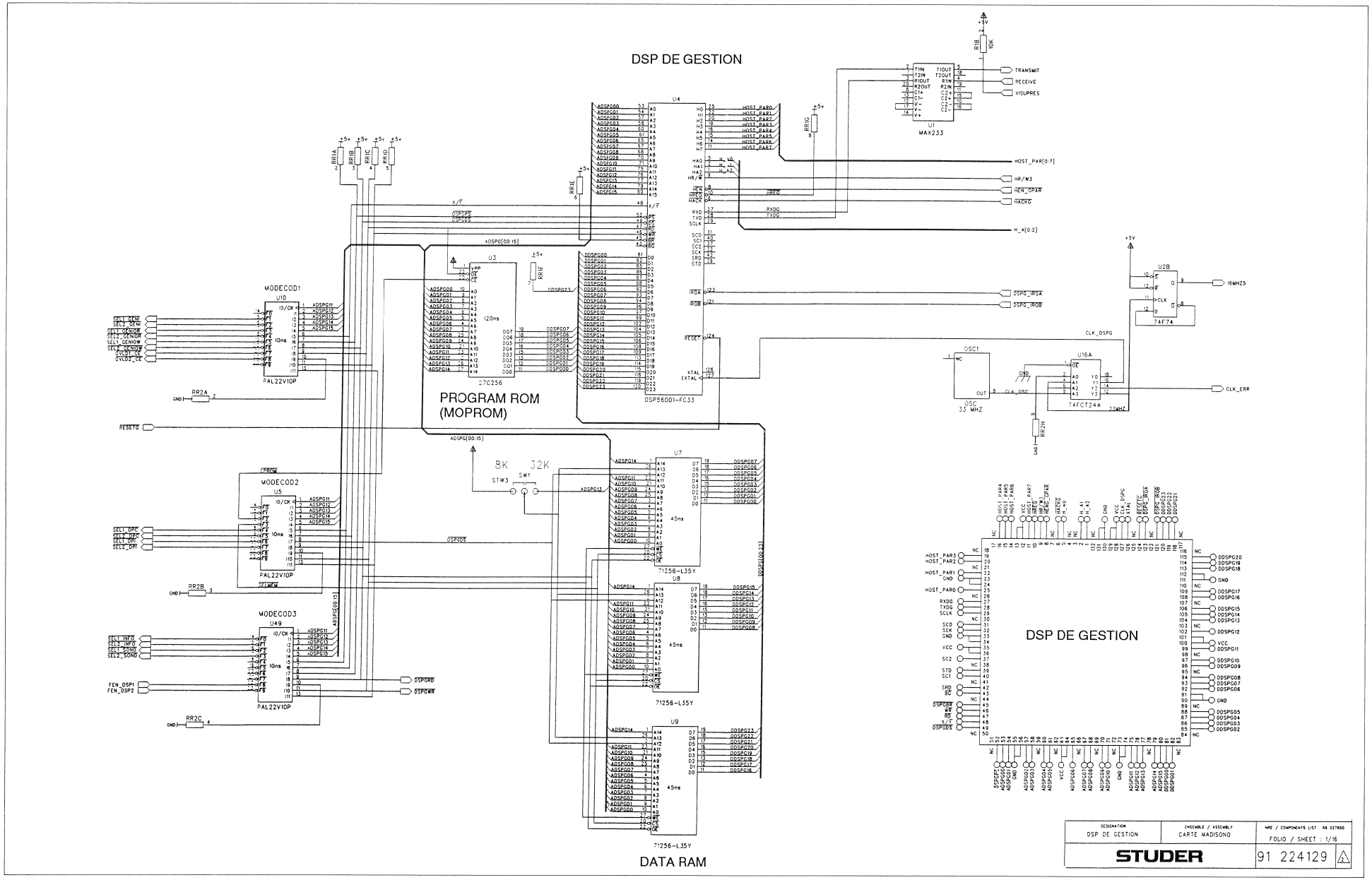

Optical Madisono 2 Madi Output Board 42.125.304.01
Coax Madisono 2 Madi Output Board 42.125.304.11

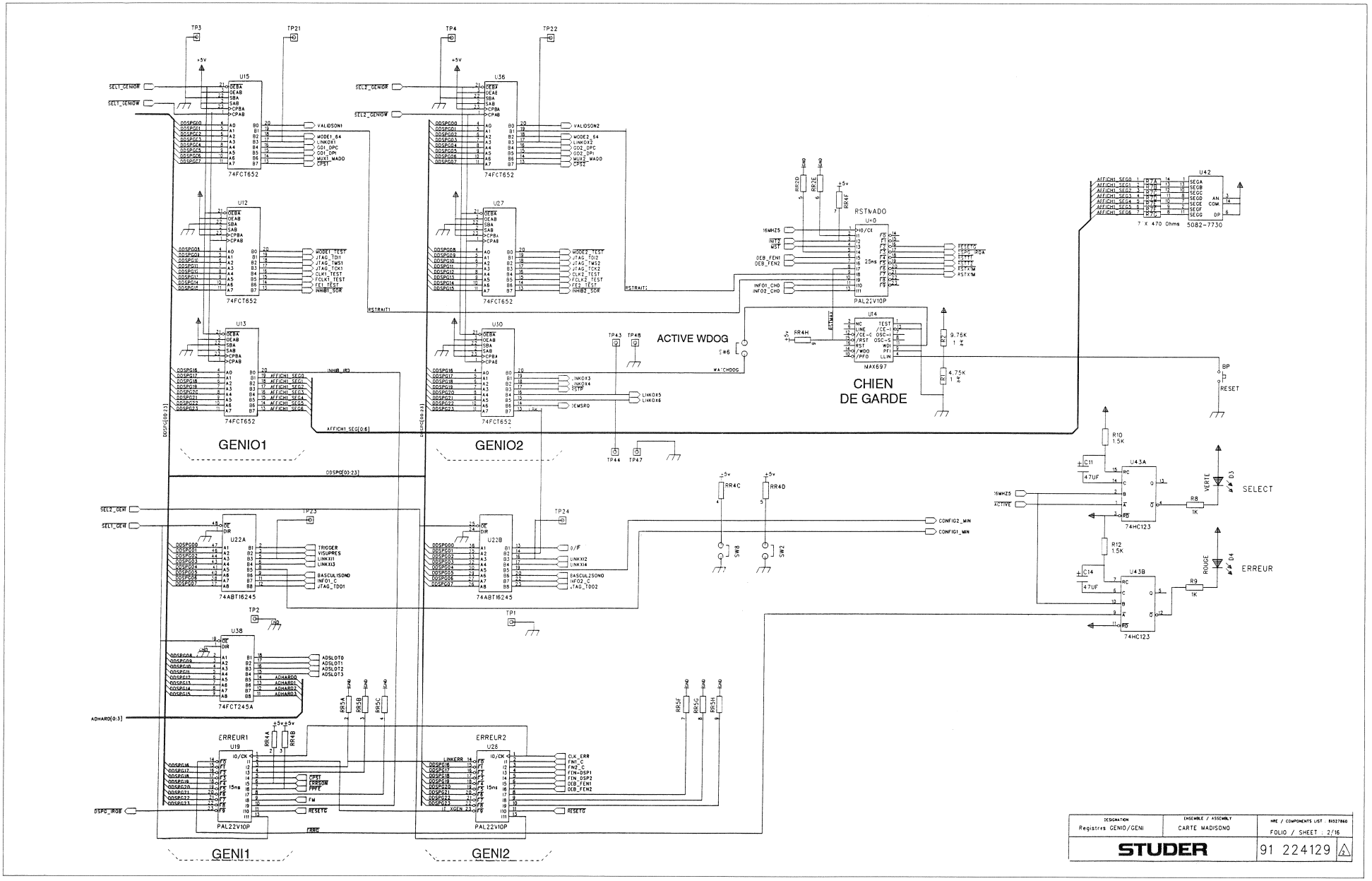

Optical Madisono 2 Madi Output Board 42.125.304.01
Coax Madisono 2 Madi Output Board 42.125.304.11

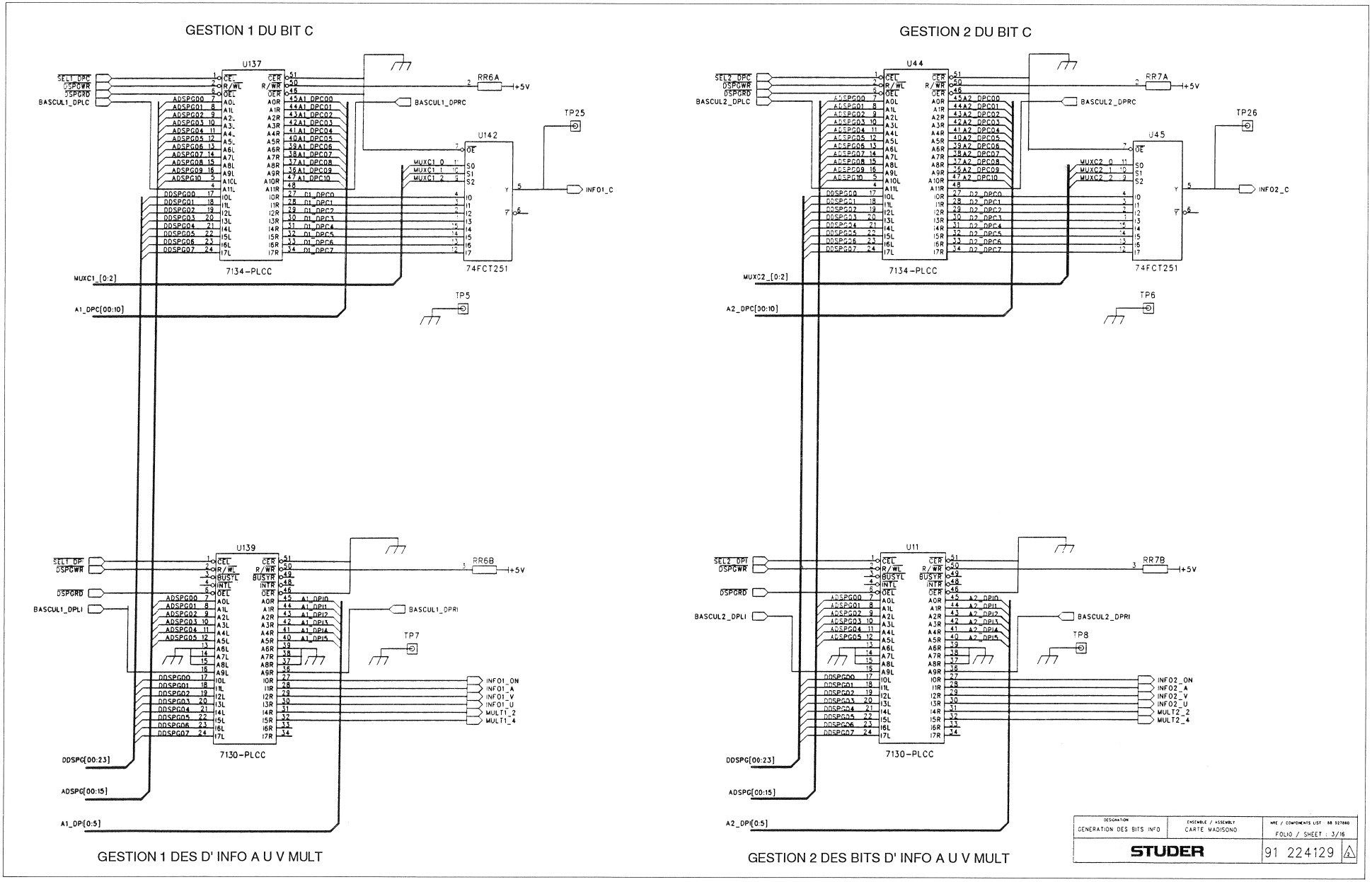

Optical Madisono 2 Madi Output Board 42.125.304.01
Coax Madisono 2 Madi Output Board 42.125.304.11

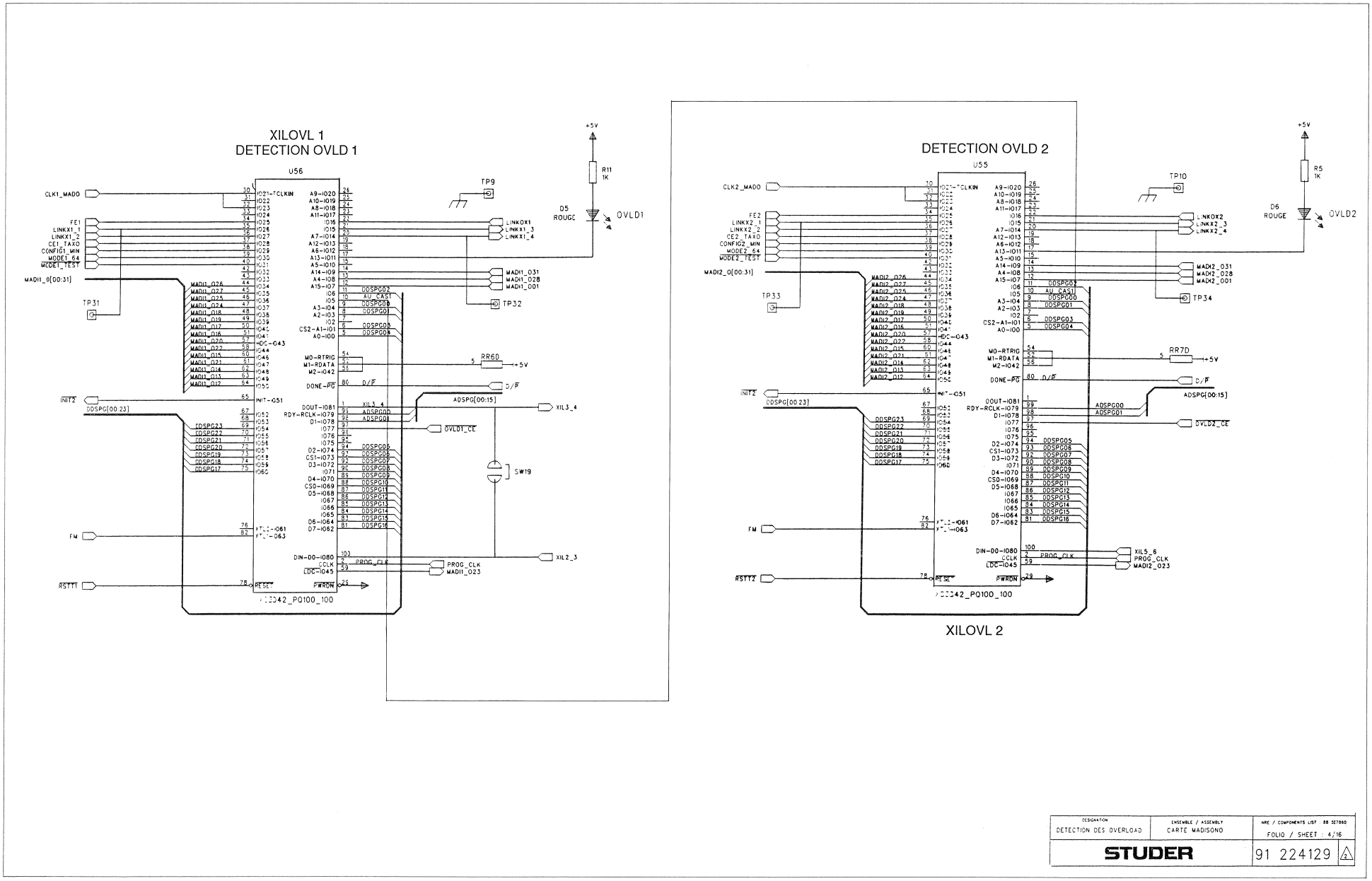

DESIGNATION	ENSEMBLE / ASSEMBLY	NRE / COMPONENTS LIST : 88 527860
DETECTION DES OVERLOAD	CARTE MADISONO	FOLIO / SHEET : 4/16
STUDER	91 224129	4

Optical Madisono 2 Madi Output Board 42.125.304.01
Coax Madisono 2 Madi Output Board 42.125.304.11

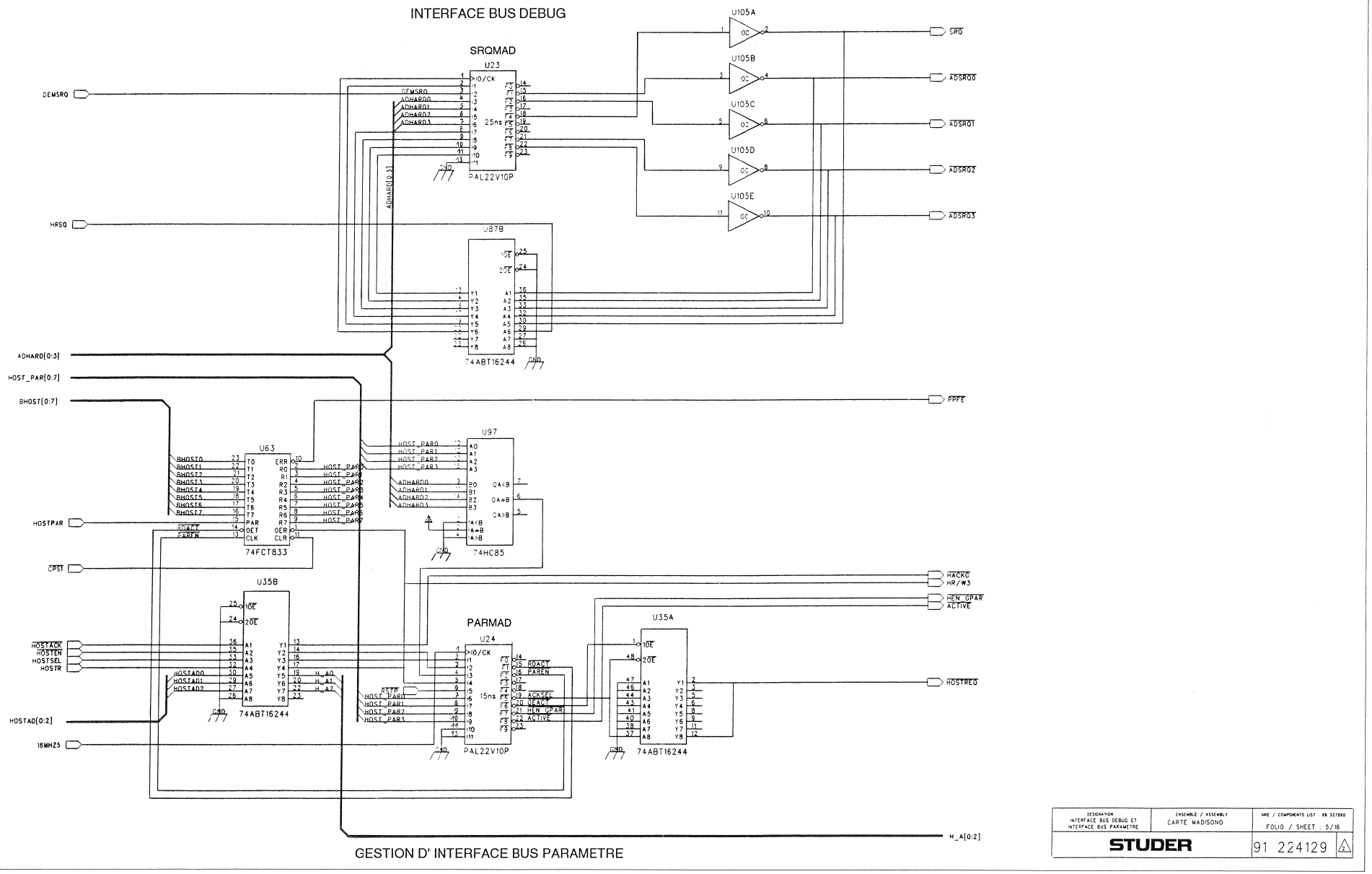

DESIGNATION: INTERFACE BUS DEBUG ET INTERFACE BUS PARAMETRE	ENSEMBLE / ASSEMBLY: CARTE MADISONO	NBE / COMPONENTS LIST : 88 527880
STUDER		FOLIO / SHEET : 5/16
		91 224129

Optical Madisono 2 Madi Output Board 42.125.304.01
Coax Madisono 2 Madi Output Board 42.125.304.11

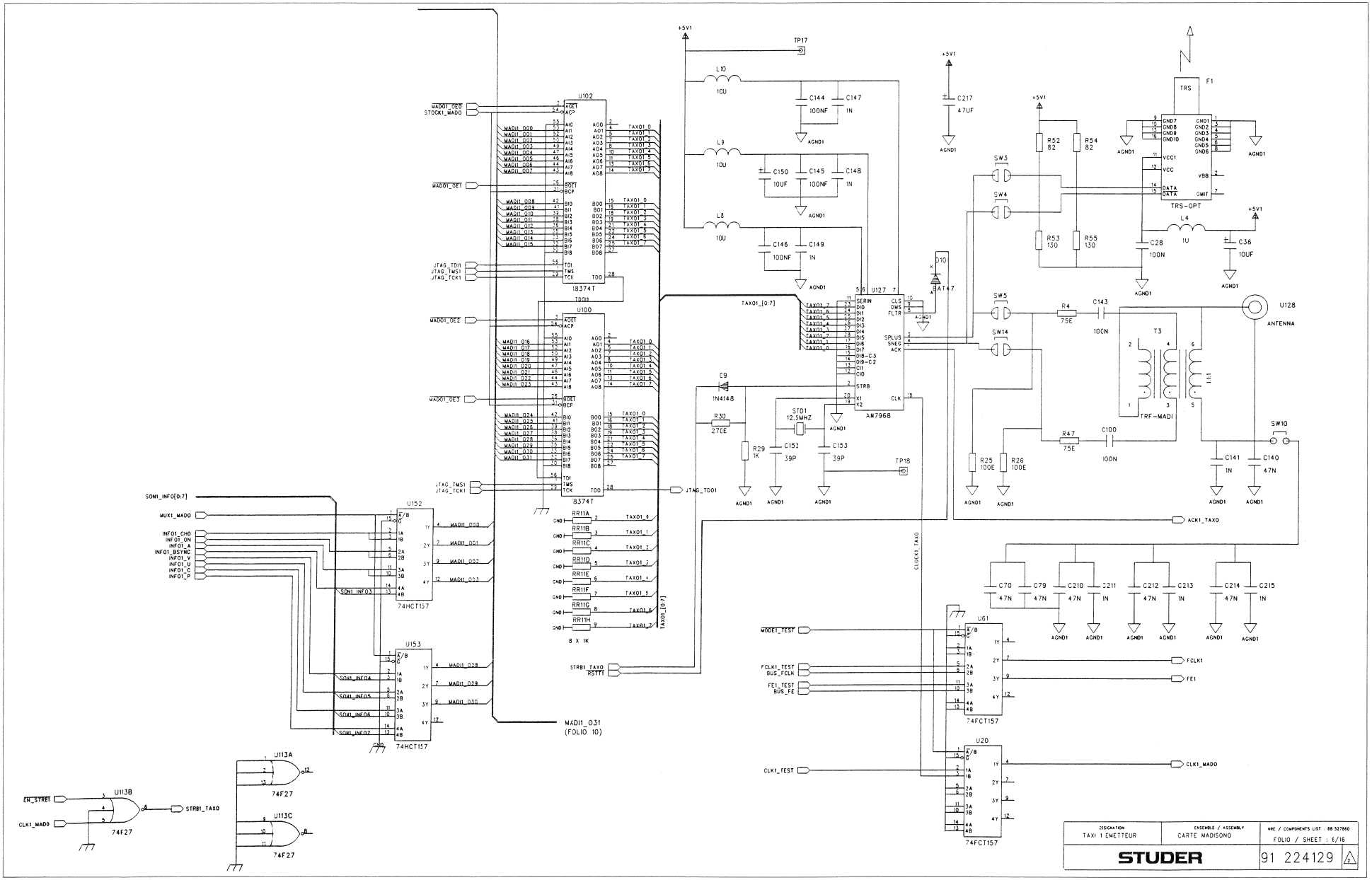

DESIGNATION	ENSEMBLE / ASSEMBLY	NRE / COMPONENTS LIST : 88.527840
TAXI 1 EMETTEUR	CARTE MADISONO	FOLIO / SHEET : 6/16
STUDER	91 224129	

Optical Madisono 2 Madi Output Board 42.125.304.01
Coax Madisono 2 Madi Output Board 42.125.304.11

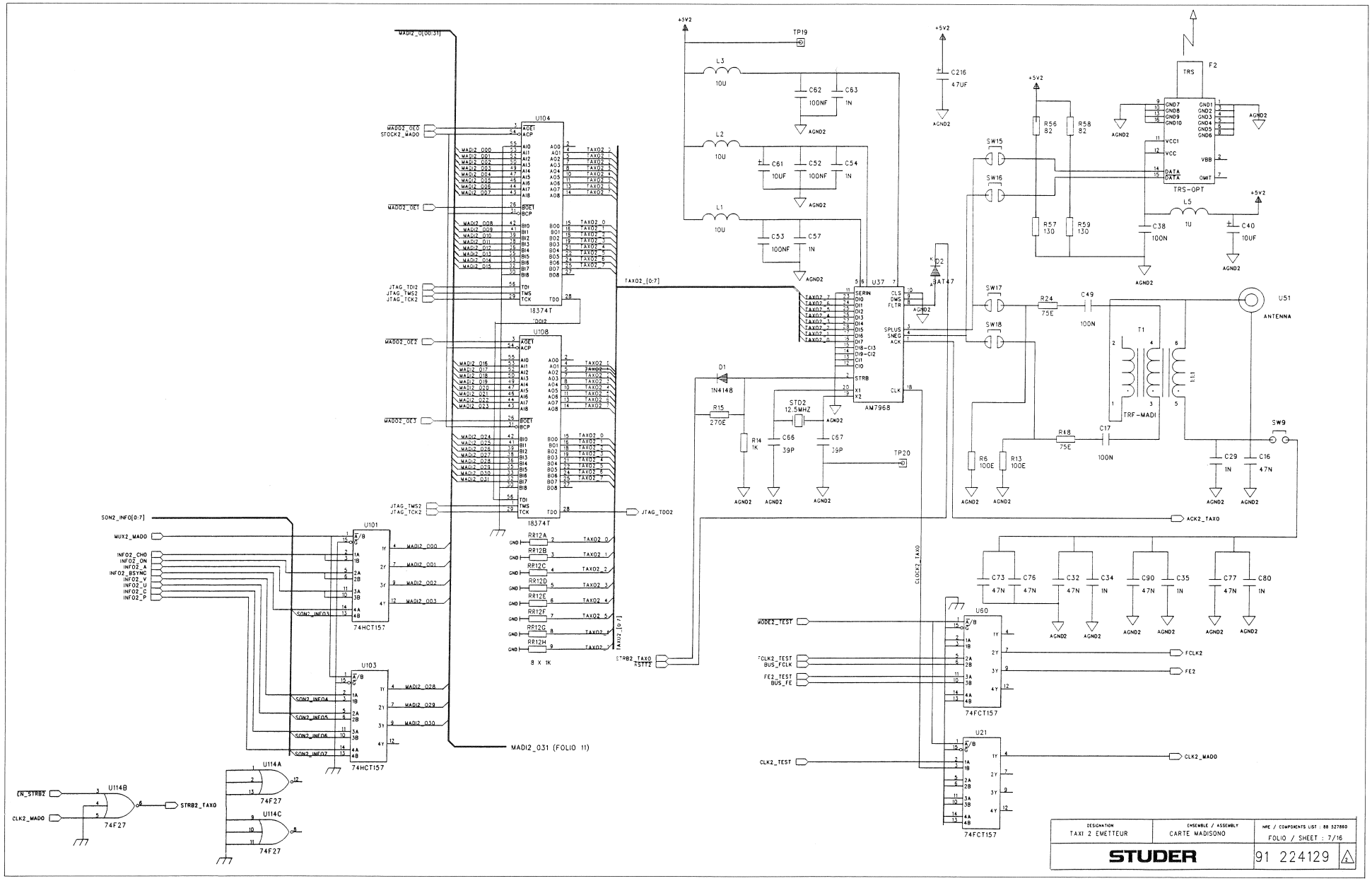

Optical Madisono 2 Madi Output Board 42.125.304.01
Coax Madisono 2 Madi Output Board 42.125.304.11

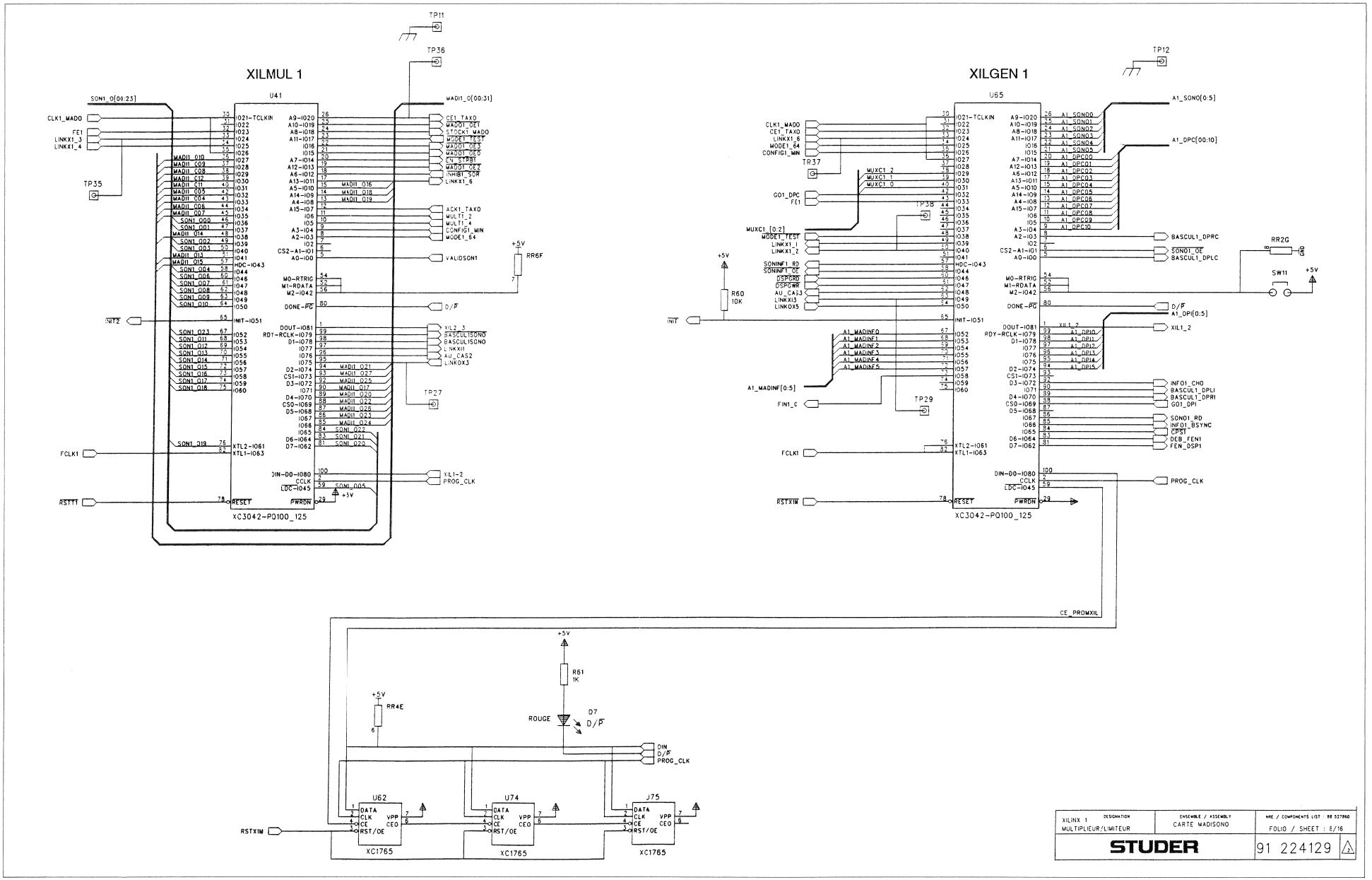

Optical Madisono 2 Madi Output Board 42.125.304.01
Coax Madisono 2 Madi Output Board 42.125.304.11

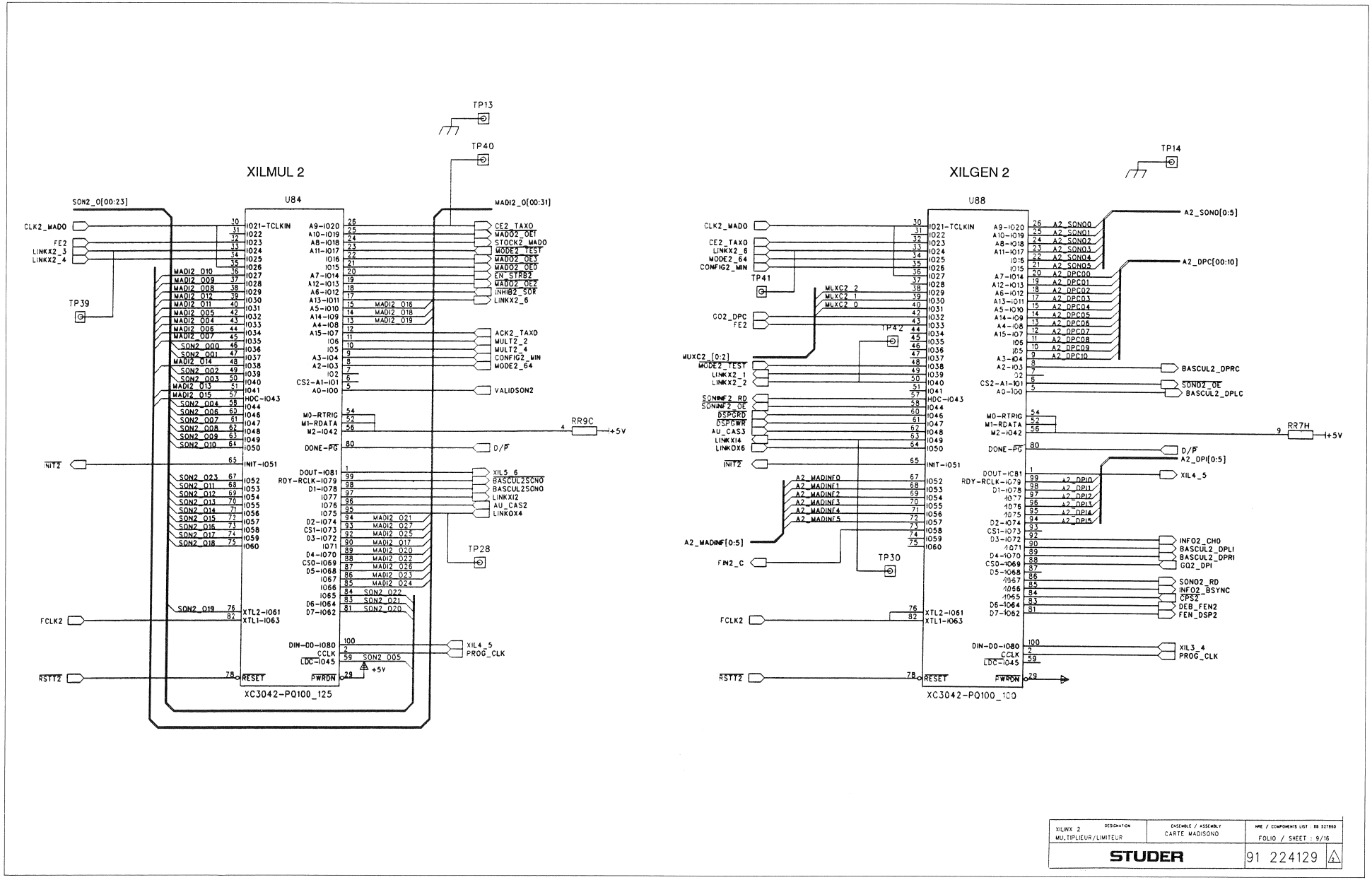

XILINX 2 DESIGNATION	ENSEMBLE / ASSEMBLY	NRE / COMPONENTS LIST : 88 327860
MULTIPLIEUR/LIMITEUR	CARTE MADISONO	FOLIO / SHEET : 9/16
STUDER	91 224129	

Optical Madisono 2 Madi Output Board 42.125.304.01
Coax Madisono 2 Madi Output Board 42.125.304.11

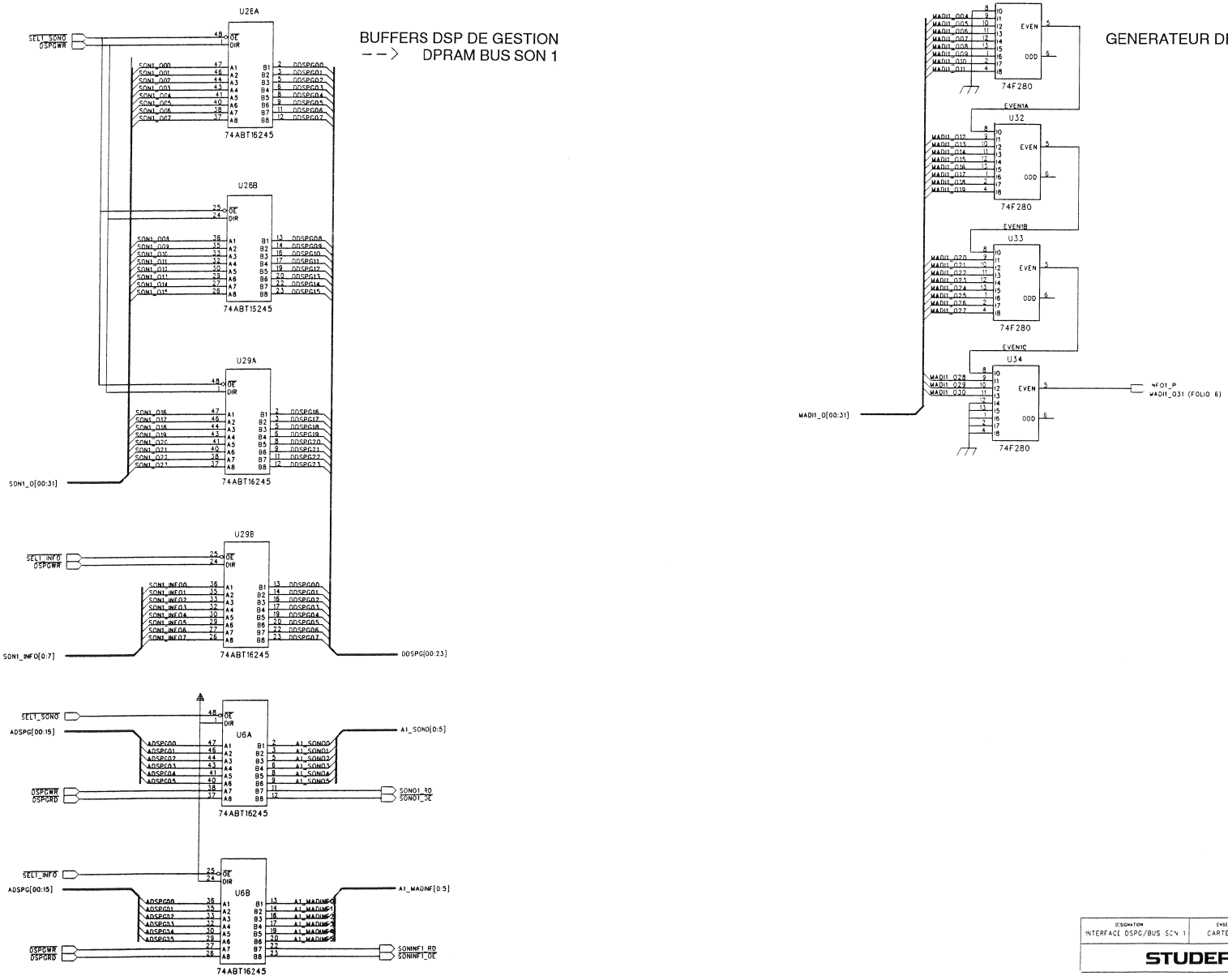

Optical Madisono 2 Madi Output Board 42.125.304.01
Coax Madisono 2 Madi Output Board 42.125.304.11

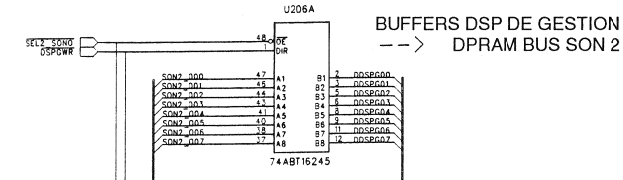

BUFFERS DSP DE GESTION
--> DPRAM BUS SON 2

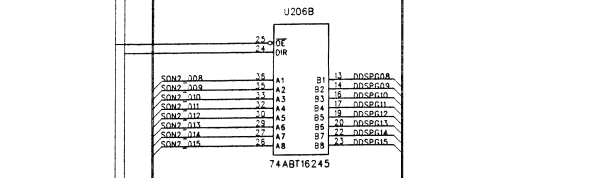

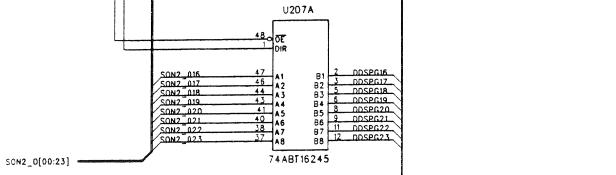

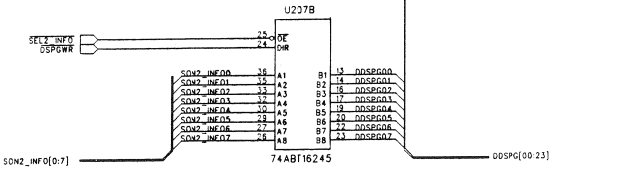

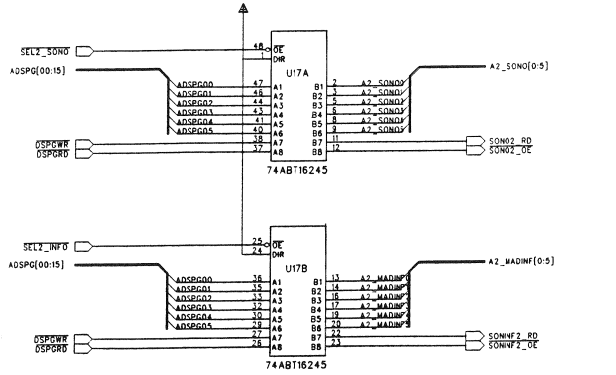

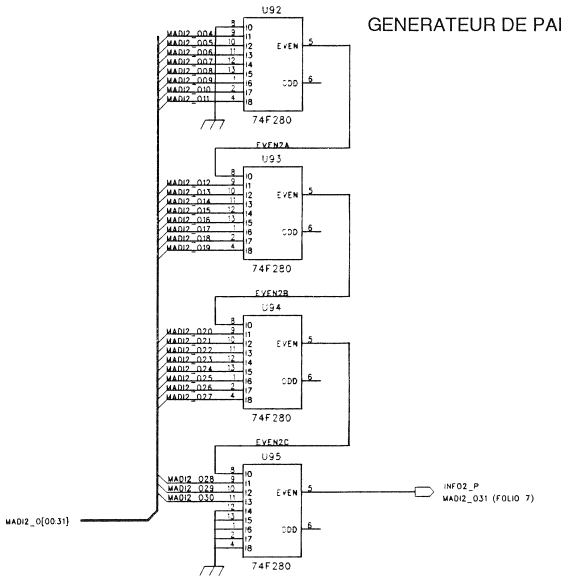

GENERATEUR DE PARITE 2

DESIGNATION	ENSEMBLE / ASSEMBLY	NRE / COMPONENTS LIST : 88 027860
INTERFACE DSPG/BUS SON 2	CARTE MADISONO	FOLIO / SHEET : 11/16
STUDER		91 224129

Optical Madisono 2 Madi Output Board 42.125.304.01
Coax Madisono 2 Madi Output Board 42.125.304.11

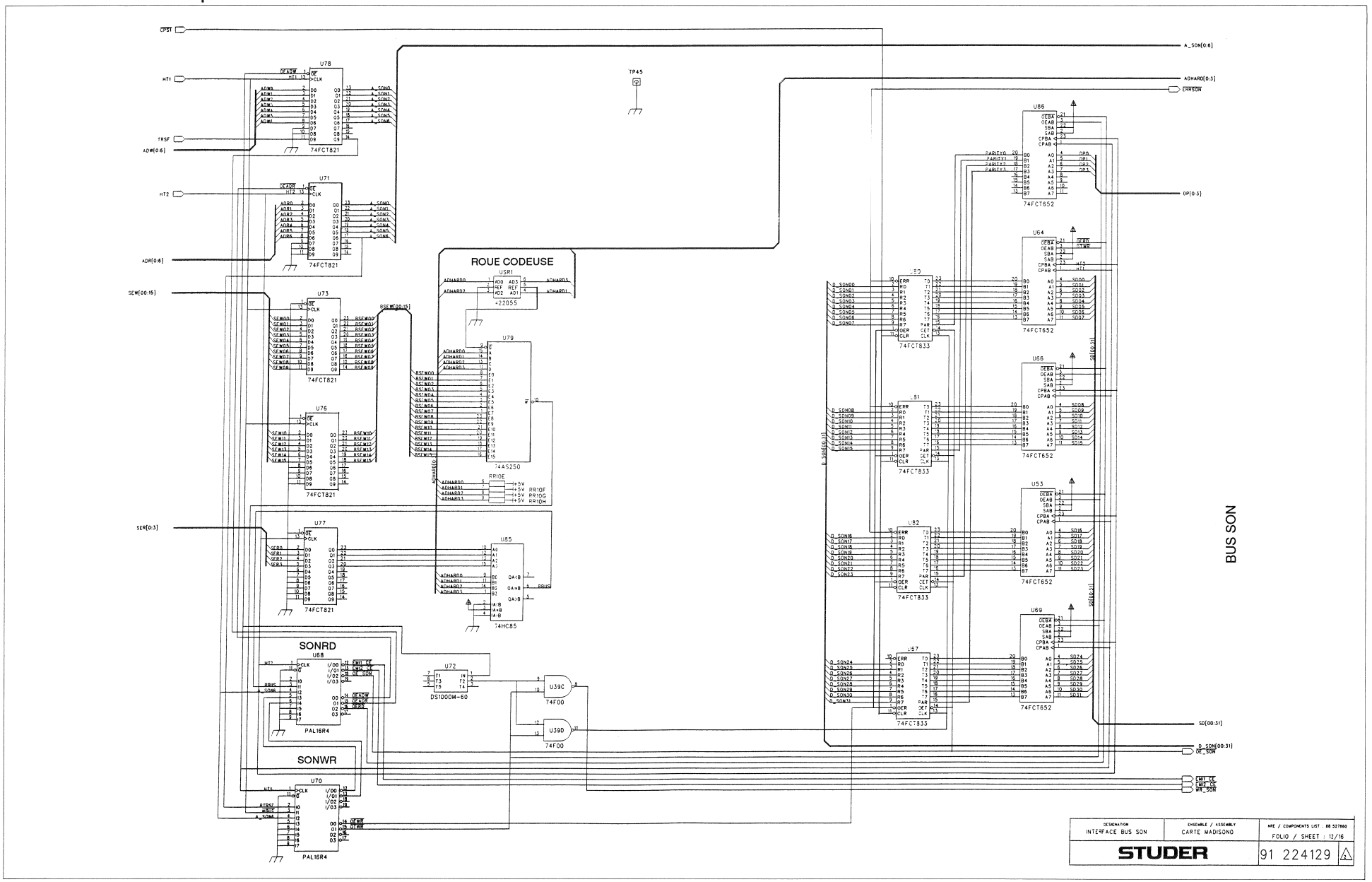

Optical Madisono 2 Madi Output Board 42.125.304.01
Coax Madisono 2 Madi Output Board 42.125.304.11

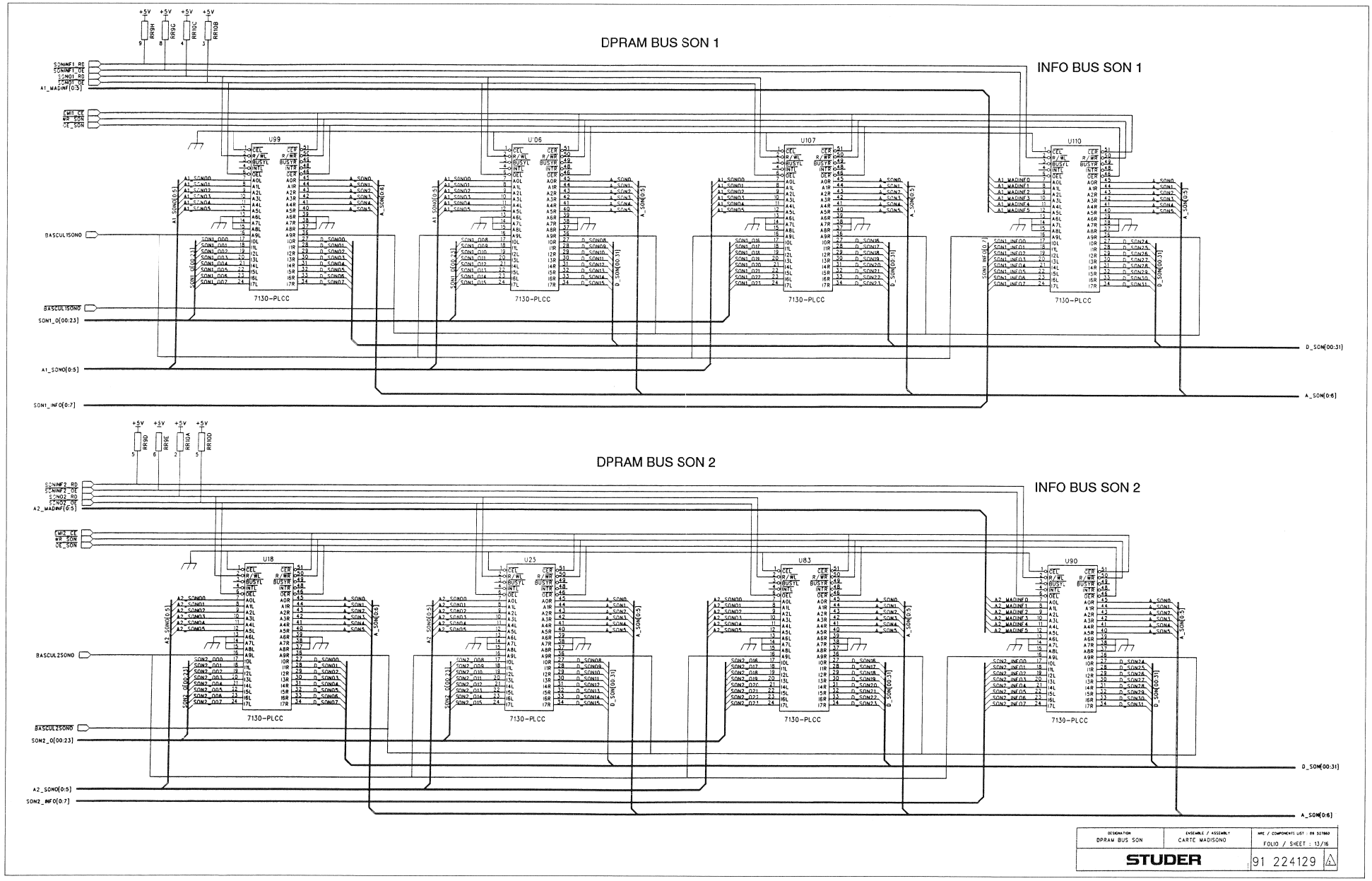

Optical Madisono 2 Madi Output Board 42.125.304.01
Coax Madisono 2 Madi Output Board 42.125.304.11

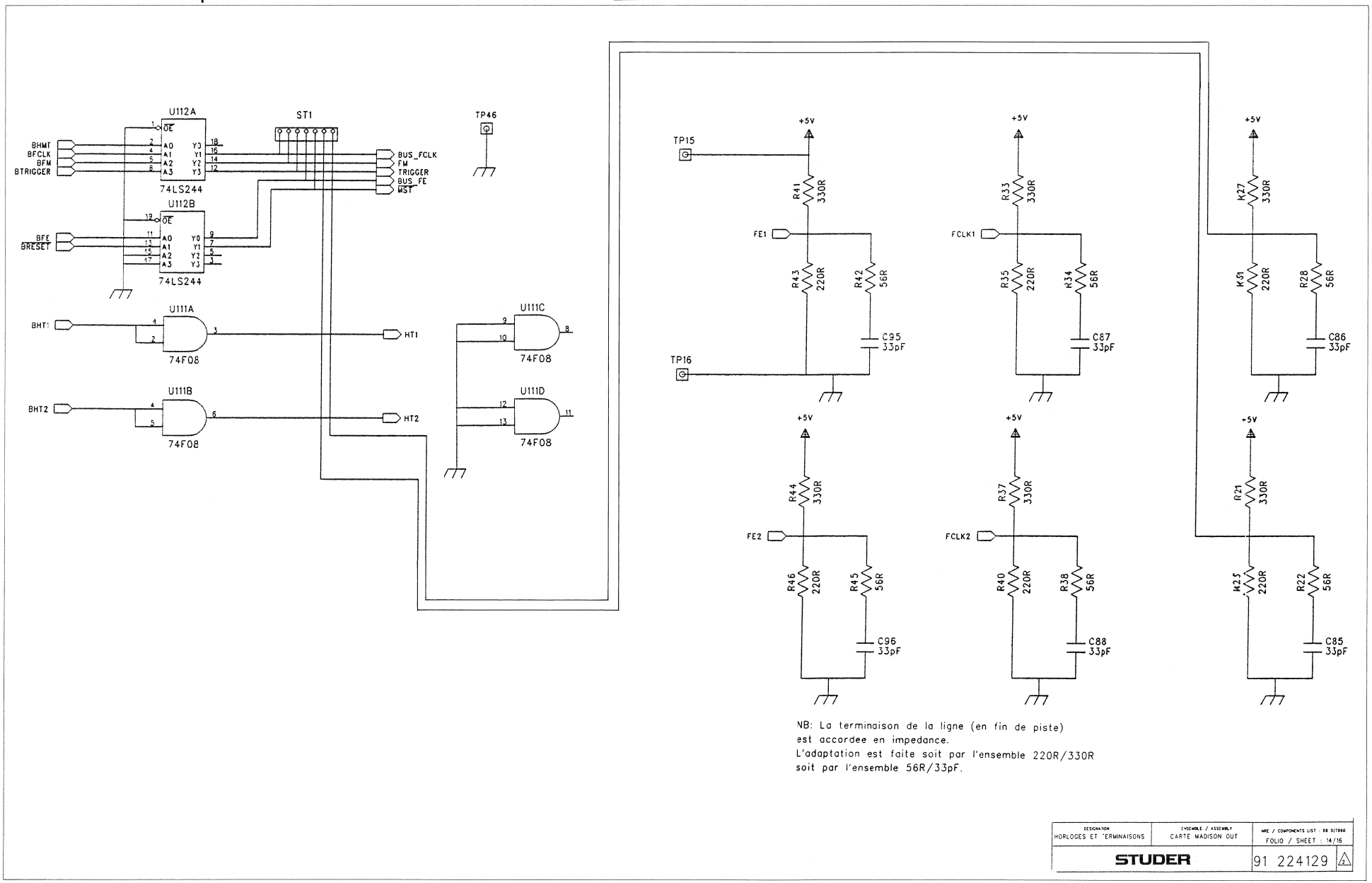

NB: La terminaison de la ligne (en fin de piste) est accordee en impedance.
L'adaptation est faite soit par l'ensemble 220R/330R soit par l'ensemble 56R/33pF.

DESIGNATION HORLOGES ET TERMINAISONS	ENSEMBLE / ASSEMBLY CARTE MADISON OUT	NBE / COMPONENTS LIST : 88 517880 FOLIO / SHEET : 14/16
STUDER		91 224129

Optical Madisono 2 Madi Output Board 42.125.304.01
Coax Madisono 2 Madi Output Board 42.125.304.11

CONNECTEUR SUPERIEUR

	RANGEE A	RANGEE B	RANGEE C
1	J5-A1	J5-B1 MGND	J5-C1
2	J5-A2	J5-B2	J5-C2
3	J5-A3	J5-B3	J5-C3
4	J5-A4	J5-B4	J5-C4
5	J5-A5	J5-B5	J5-C5
6	J5-A6	J5-B6 GND	J5-C6
7	J5-A7	J5-B7 +5V	J5-C7
8	J5-A8	J5-B8 ADSLOT3	J5-C8
9	J5-A9	J5-B9 ADSLOT2	J5-C9
10	J5-A10	J5-B10 ADSLOT1	J5-C10
11	J5-A11	J5-B11 ADSLOT0	J5-C11
12	J5-A12	J5-B12 GND	J5-C12
13	J5-A13	J5-B13	J5-C13
14	J5-A14	J5-B14	J5-C14
15	J5-A15	J5-B15 GND	J5-C15
16	J5-A16	J5-B16	J5-C16
17	J5-A17	J5-B17	J5-C17
18	J5-A18	J5-B18	J5-C18
19	J5-A19	J5-B19	J5-C19
20	J5-A20	J5-B20	J5-C20
21	J5-A21	J5-B21	J5-C21
22	J5-A22	J5-B22	J5-C22
23	J5-A23	J5-B23	J5-C23
24	J5-A24	J5-B24	J5-C24
25	J5-A25	J5-B25	J5-C25
26	J5-A26	J5-B26	J5-C26
27	J5-A27	J5-B27	J5-C27
28	J5-A28	J5-B28	J5-C28
29	J5-A29	J5-B29	J5-C29
30	J5-A30	J5-B30	J5-C30
31	J5-A31	J5-B31	J5-C31
32	J5-A32	J5-B32 MGND	J5-C32

CONNECTEUR MILIEU

	RANGEE A	RANGEE B	RANGEE C
1	J2-A1 ADR0	J2-B1 ADR1	J2-C1 ADR2
2	J2-A2 ADR3	J2-B2 ADR4	J2-C2 ADR5
3	J2-A3 ADR6	J2-B3 ADW5	J2-C3 ADW6
4	J2-A4 ADW0	J2-B4	J2-C4 TRSF
5	J2-A5 ADW1	J2-B5	J2-C5 SEW00
6	J2-A6 ADW2	J2-B6	J2-C6 SEW01
7	J2-A7 ADW3	J2-B7	J2-C7 SEW02
8	J2-A8 ADW4	J2-B8	J2-C8 SEW03
9	J2-A9 GND	J2-B9	J2-C9 GND
10	J2-A10	J2-B10	J2-C10 SD00
11	J2-A11 GND	J2-B11	J2-C11 SD01
12	J2-A12 SEW12	J2-B12 SEW04	J2-C12 SD02
13	J2-A13 SEW13	J2-B13 SEW05	J2-C13 SD03
14	J2-A14 SEW14	J2-B14 SEW06	J2-C14 SD04
15	J2-A15 GND	J2-B15 SEW07	J2-C15 SD05
16	J2-A16 SEW15	J2-B16 SEW08	J2-C16 SD06
17	J2-A17 GND	J2-B17 SEW09	J2-C17 SD07
18	J2-A18 SER0	J2-B18 SEW10	J2-C18 SD08
19	J2-A19 GND	J2-B19 SEW11	J2-C19 SD09
20	J2-A20 SER1	J2-B20 GND	J2-C20 SD10
21	J2-A21	J2-B21 SER2	J2-C21 SD11
22	J2-A22	J2-B22 SER3	J2-C22 SD12
23	J2-A23 SD28	J2-B23 GND	J2-C23 SD13
24	J2-A24 SD29	J2-B24 SD21	J2-C24 SD14
25	J2-A25 SD30	J2-B25 SD22	J2-C25 SD15
26	J2-A26 SD31	J2-B26 SD23	J2-C26 SD16
27	J2-A27 DP0	J2-B27 SD24	J2-C27 SD17
28	J2-A28 DP1	J2-B28 SD25	J2-C28 SD18
29	J2-A29 DP2	J2-B29 SD26	J2-C29 SD19
30	J2-A30 DP3	J2-B30 SD27	J2-C30 SD20
31	J2-A31	J2-B31	J2-C31
32	J2-A32 +5V	J2-B32 +5V	J2-C32 +5V

CONNECTEUR INFERIEUR

	RANGEE A	RANGEE B	RANGEE C
1	J4-A1	J4-B1	J4-C1 BHOST0
2	J4-A2	J4-B2	J4-C2 BHOST1
3	J4-A3	J4-B3	J4-C3 BHOST2
4	J4-A4	J4-B4	J4-C4 BHOST3
5	J4-A5	J4-B5	J4-C5 BHOST4
6	J4-A6	J4-B6	J4-C6 BHOST5
7	J4-A7	J4-B7	J4-C7 BHOST6
8	J4-A8	J4-B8	J4-C8 BHOST7
9	J4-A9 GND	J4-B9	J4-C9 GND
10	J4-A10 BFE	J4-B10	J4-C10
11	J4-A11 GND	J4-B11	J4-C11 HOSTPAR
12	J4-A12 BHT2	J4-B12	J4-C12 HOSTAD0
13	J4-A13	J4-B13	J4-C13 HOSTAD1
14	J4-A14 BHT1	J4-B14	J4-C14 HOSTAD2
15	J4-A15 GND	J4-B15	J4-C15 HOSTR
16	J4-A16 BHWT	J4-B16	J4-C16 HOSTACK
17	J4-A17 GND	J4-B17	J4-C17 HOSTEN
18	J4-A18	J4-B18	J4-C18 HOSTSEL
19	J4-A19 GND	J4-B19	J4-C19 HOSTREQ
20	J4-A20 BFM	J4-B20 GND	J4-C20
21	J4-A21	J4-B21	J4-C21 HRSQ
22	J4-A22	J4-B22	J4-C22 SRQ
23	J4-A23	J4-B23 GND	J4-C23
24	J4-A24 BFCLK	J4-B24	J4-C24 BTRIGGER
25	J4-A25	J4-B25	J4-C25
26	J4-A26 BRESET	J4-B26	J4-C26 ADSRQ3
27	J4-A27	J4-B27	J4-C27 ADSRQ2
28	J4-A28	J4-B28	J4-C28 ADSRQ1
29	J4-A29	J4-B29	J4-C29 ADSRQ0
30	J4-A30	J4-B30	J4-C30
31	J4-A31 MGND	J4-B31	J4-C31 MGND
32	J4-A32 +5V	J4-B32 +5V	J4-C32 +5V

CONNECTEUR DEBUG

J6-1	VISUPRES
J6-2	RECEIVE
J6-3	TRANSMIT
J6-4	
J6-5	GND
J6-6	
J6-7	
J6-8	
J6-9	

CONNECTEUR PROG XILINX

J3-1	+5V
J3-2	GND
J3-3	
J3-4	PROG_CLK
J3-5	DIP
J3-6	DIN

DESIGNATION	ENSEMBLE / ASSEMBLY	NME / COMPONENTS LIST : 88 527860
CONNECTEURS	CARTE MADISONO	FOLIO / SHEET : 15/16
STUDER	91 224129	A

Optical Madisono 2 Madi Output Board 42.125.304.01
Coax Madisono 2 Madi Output Board 42.125.304.11

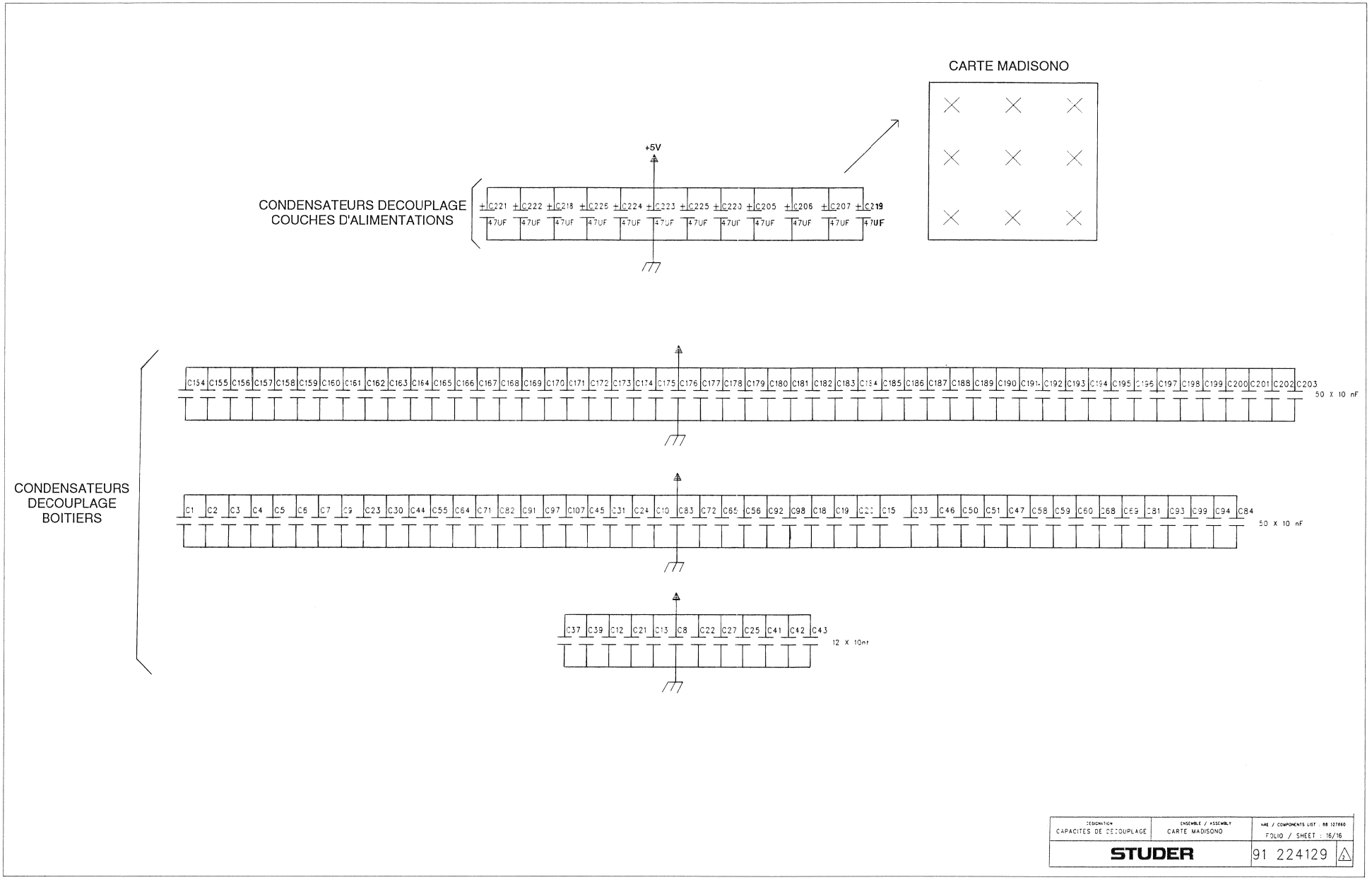

Optical Madisono 2 Madi Output Board 42.125.304.01
Coax Madisono 2 Madi Output Board 42.125.304.11

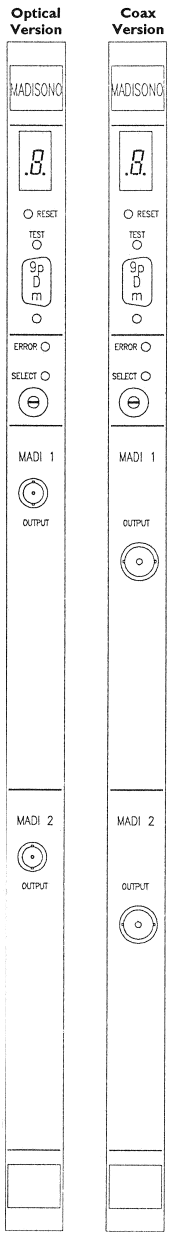

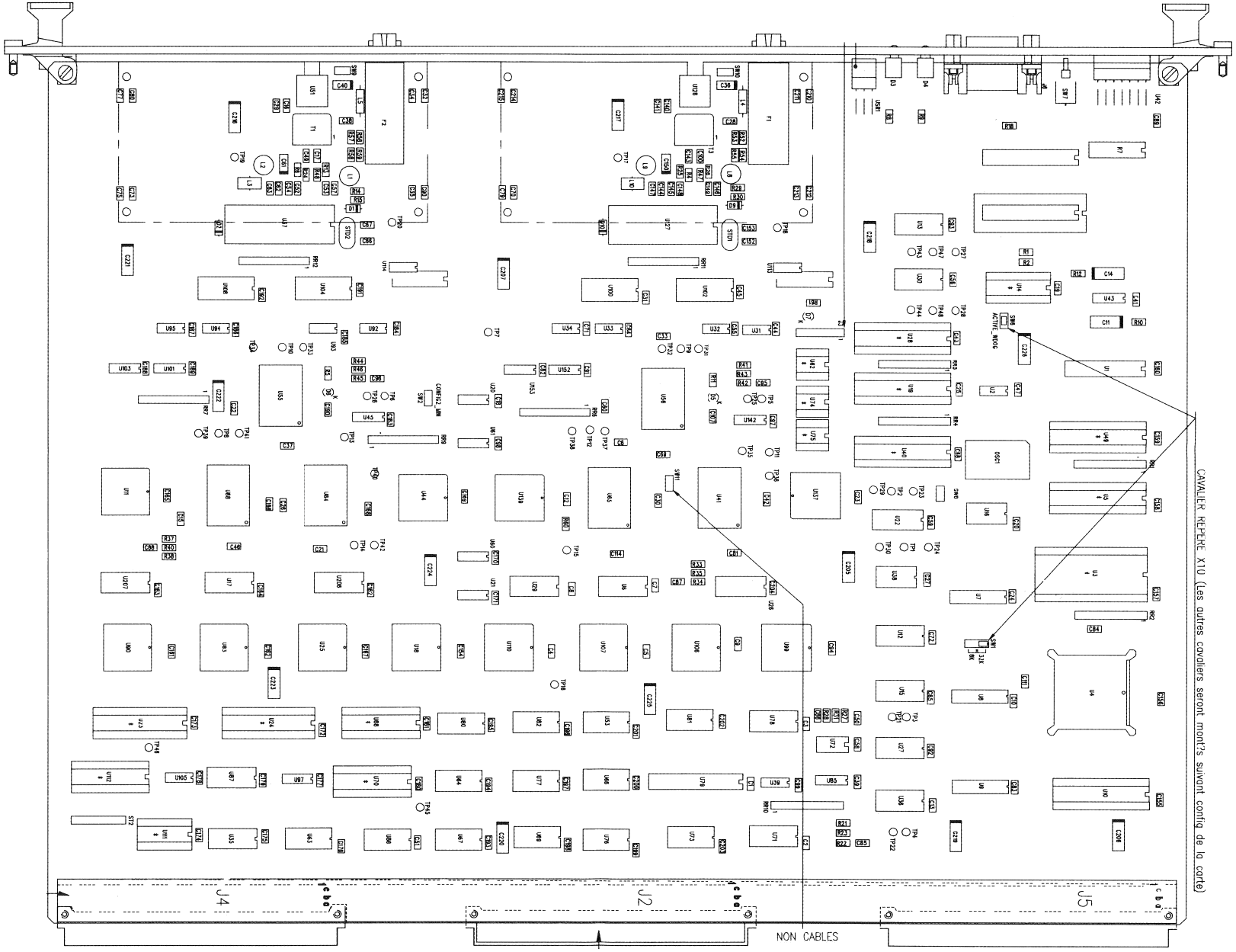

CAVALIER REPERE X10 (Les autres cavaliers seront mont?s suivant config de la carte)

Optical Madisono 2 Madi Output Board 42.125.304.01
Coax Madisono 2 Madi Output Board 42.125.304.11

MODIF.: ND. Xa=ajout - IND. Xm=modif. ref. et/ou valeur - IND. Xs=suppression

REPERE	IND	COMPOSANT	DESIGNATION	VALEUR	QTE	FABRIQ.	BOITIER
A1		91224129	SCHEMA		1		
A2		91224130	FILM CIRCUIT		1		
A3		30224130	TEST DE CONFORMITE		1		
A4		91224131	FILM DE SERIGRAPHIE		1		
A5		91224132	FILM EPARGNE SOUDURE		1		
A6		91224133	FILM PATE A BRASER		1		
A7		30224133	ECRAN PATE A BRASER		1		
A8		91122569	PLAN DE FABRICATION		1		
A9		30122569	OUTIL DE FABRICATION		1		
A10		91122570	USINAGE FACE AVANT		1		
A11		91224134	FILM SERIGRAPHIE FACE AVANT		1		
A12		91224135	PLAN DE SERIGRAPHIE FACE AVANT		1		
A13		30224135	OUTIL DE SERIGRAPHIE FACE AVANT		1		
A14	1m	91815561	FILM SERIG.POIGNEE FACE AVANT REP. D10		1		
A15		91830750	PLAN DE SERIGRAPHIE POIGNEE FACE AVANT		1		
A16		30830750	OUTIL DE SERIGRAPHIE POIGNEE FACE AVANT		1		
A17		91815505	ETIQUETTE REPERE CONNECTEUR		1		
A18		91316870	RAIDISSEUR		1		
A19		91122571	PLAN D'EQUIPEMENT		1		
A20	5m	91830799	BLINDAGE		2		
A21	1a	91830800	PATTE DE FIXATION		1		
A22	1a	91815597	VIS M2.5x14		6		
A23	6a	91830884	PLAN DE CONFIGURATION CARTE		1		
D1		95222854	DIODE	1N4448	1		
D2		95129000	DIODE	BAT47	1		
D3		95163002	LED VERT	HLMP1790	1		
D4		95163000	LED ROUGE	HLMP1700	1		
D5	1a	95110015	LED DIA :1,8 ROUGE	LTL709R (223945)	1		ORBITEC
D6	1a	95110015	LED DIA :1,8 ROUGE	LTL709R (223945)	1		ORBITEC
D7	1a	95110015	LED DIA :1,8 ROUGE	LTL709R (223945)	1		ORBITEC
D9		95222854	DIODE	1N4448	1		
D10		95129000	DIODE	BAT47	1		
F1	6m		NEANT				
F2	6m		NEANT				
J2		94410049	CONNEC' DIN 96Pts F	COUDE MALE	1		SOURIAU
J3	1s	94450009	REPART MINI WRAP	385-0358-1-40-40-0	0		COMATEL
J4		94410049	CONNEC' DIN 96Pts F	COUDE MALE	1		SOURIAU
J5		94410049	CONNEC' DIN 96Pts F	COUDE MALE	1		SOURIAU
J6		94480021	CONNEC' SUBD 9Pts M	ZEDE 111979-011	1		ITT
L1		95400006	SELF	10uH 10%	1		
L2		95400006	SELF	10uH 10%	1		
L3		95400007	SELF	10uH 1A	1		
L4	1m	95450003	SELF REF:2129	22uH	1		
L5	1m	95450003	SELF REF:2129	22uH	1		
L8		95400006	SELF	10uH 10%	1		
L9		95400006	SELF	10uH 10%	1		
L10		95400007	SELF	10uH 1A	1		
OSC1		95010011	OSC CMOS +/- 100PPM	NCHO80C-33MH3	1		SARONIX
R7		95650012	RESEAU DE RESISTANCE	DIP 14 470 OHMS	1		
RR1		95650001	RESEAU DE RESISTANCE	SIL 8/9 10K C104	1		
RR2		95650025	RESEAU DE RESISTANCE	SIL 8/9 1K C104	1		
RR3	1s		RESEAU DE RESISTANCE	SIL 8/9 1K C104	0		
RR4		95650001	RESEAU DE RESISTANCE	SIL 8/9 10K C104	1		
RR5		95650025	RESEAU DE RESISTANCE	SIL 8/9 1K C104	1		
RR6		95650001	RESEAU DE RESISTANCE	SIL 8/9 10K C104	1		
RR7		95650001	RESEAU DE RESITANCE	SIL 8/9 10K C104	1		
RR8	1s		RESEAU DE RESISTANCE	SIL 8/9 1K C104	0		
RR9		95650001	RESEAU DE RESISTANCE	SIL 8/9 10K C104	1		
RR10		95650001	RESEAU DE RESISTANCE	SIL 8/9 10K C104	1		
RR11		95650025	RESEAU DE RESISTANCE	SIL 8/9 1K C104	1		
RR12		95650025	RESEAU DE RESISTANCE	SIL 8/9 1K C104	1		
ST2		94450009	REPART MINI WRAP	385-0358-1-40-40-0	.175		COMATEL
STD1		95010012	QUARTZ HC18/U	12.5MHZ 89-01-1013	1		STI
STD2		95010012	QUARTZ HC18/U	12.5MHZ 89-01-1013	1		STI
SW1		94450009	REPART MINI WRAP	385-0358-1-40-40-0	.075		COMATEL
SW2		94450009	REPART MINI WRAP	385-0358-1-40-40-0	.05		COMATEL
SW6		94450009	REPART MINI WRAP	385-0358-1-40-40-0	.05		COMATEL
SW7		94563003	POUSSOIR	9233WWC0	1		APR
SW8		94450009	REPART MINI WRAP	385-0358-1-40-40-0	.05		COMATEL
SW9		94450009	REPART MINI WRAP	385-0358-1-40-40-0	.05		COMATEL
SW10		94450009	REPART MINI WRAP	385-0358-1-40-40-0	.05		COMATEL
SW11	1s	94450009	REPART MINI WRAP	385-0358-1-40-40-0	0		COMATEL
SW12	1s		REPART MINI WRAP	385-0358-1-40-40-0	0		COMATEL
SW13	1s		REPART MINI WRAP	385-0358-1-40-40-0	0		COMATEL
T1	6m	95400005	TRANSFC HF	76602/5	1		NEWPORT
T3	6m	95400005	TRANSFC HF	76602/5	1		NEWPORT
TP1		94450009	REPART MINI WRAP	385-0358-1-40-40-0	.025		COMATEL
TP2		94450009	REPART MINI WRAP	385-0358-1-40-40-0	.025		COMATEL
TP3		94450009	REPART MINI WRAP	385-0358-1-40-40-0	.025		COMATEL
TP4		94450009	REPART MINI WRAP	385-0358-1-40-40-0	.025		COMATEL
TP5		94450009	REPART MINI WRAP	385-0358-1-40-40-0	.025		COMATEL
TP6		94450009	REPART MINI WRAP	385-0358-1-40-40-0	.025		COMATEL
TP7		94450009	REPART MINI WRAP	385-0358-1-40-40-0	.025		COMATEL
TP8		94450009	REPART MINI WRAP	385-0358-1-40-40-0	.025		COMATEL
TP9		94450009	REPART MINI WRAP	385-0358-1-40-40-0	.025		COMATEL
TP10		94450009	REPART MINI WRAP	385-0358-1-40-40-0	.025		COMATEL
TP11		94450009	REPART MINI WRAP	385-0358-1-40-40-0	.025		COMATEL
TP12		94450009	REPART MINI WRAP	385-0358-1-40-40-0	.025		COMATEL
TP13		94450009	REPART MINI WRAP	385-0358-1-40-40-0	.025		COMATEL
TP14		94450009	REPART MINI WRAP	385-0358-1-40-40-0	.025		COMATEL
TP15		94450009	REPART MINI WRAP	385-0358-1-40-40-0	.025		COMATEL
TP16		94450009	REPART MINI WRAP	385-0358-1-40-40-0	.025		COMATEL
TP17		94450009	REPART MINI WRAP	385-0358-1-40-40-0	.025		COMATEL
TP18		94450009	REPART MINI WRAP	385-0358-1-40-40-0	.025		COMATEL
TP19		94450009	REPART MINI WRAP	385-0358-1-40-40-0	.025		COMATEL
TP20		94450009	REPART MINI WRAP	385-0358-1-40-40-0	.025		COMATEL
TP21		94450009	REPART MINI WRAP	385-0358-1-40-40-0	.025		COMATEL
TP22		94450009	REPART MINI WRAP	385-0358-1-40-40-0	.025		COMATEL
TP23		94450009	REPART MINI WRAP	385-0358-1-40-40-0	.025		COMATEL
TP24		94450009	REPART MINI WRAP	385-0358-1-40-40-0	.025		COMATEL
TP25		94450009	REPART MINI WRAP	385-0358-1-40-40-0	.025		COMATEL
TP26		94450009	REPART MINI WRAP	385-0358-1-40-40-0	.025		COMATEL
TP27		94450009	REPART MINI WRAP	385-0358-1-40-40-0	.025		COMATEL
TP28		94450009	REPART MINI WRAP	385-0358-1-40-40-0	.025		COMATEL
TP29		94450009	REPART MINI WRAP	385-0358-1-40-40-0	.025		COMATEL
TP30		94450009	REPART MINI WRAP	385-0358-1-40-40-0	.025		COMATEL
TP31		94450009	REPART MINI WRAP	385-0358-1-40-40-0	.025		COMATEL
TP32		94450009	REPART MINI WRAP	385-0358-1-40-40-0	.025		COMATEL
TP33		94450009	REPART MINI WRAP	385-0358-1-40-40-0	.025		COMATEL
TP34		94450009	REPART MINI WRAP	385-0358-1-40-40-0	.025		COMATEL
TP35		94450009	REPART MINI WRAP	385-0358-1-40-40-0	.025		COMATEL
TP36		94450009	REPART MINI WRAP	385-0358-1-40-40-0	.025		COMATEL
TP37		94450009	REPART MINI WRAP	385-0358-1-40-40-0	.025		COMATEL
TP38		94450009	REPART MINI WRAP	385-0358-1-40-40-0	.025		COMATEL
TP39		94450009	REPART MINI WRAP	385-0358-1-40-40-0	.025		COMATEL
TP40		94450009	REPART MINI WRAP	385-0358-1-40-40-0	.025		COMATEL
TP41		94450009	REPART MINI WRAP	385-0358-1-40-40-0	.025		COMATEL
TP42		94450009	REPART MINI WRAP	385-0358-1-40-40-0	.025		COMATEL
TP43	1a	94450009	REPART MINI WRAP	385-0358-1-40-40-0	.025		COMATEL
TP44	1a	94450009	REPART MINI WRAP	385-0358-1-40-40-0	.025		COMATEL
TP45	1a	94450009	REPART MINI WRAP	385-0358-1-40-40-0	.025		COMATEL
TP46	1a	94450009	REPART MINI WRAP	385-0358-1-40-40-0	.025		COMATEL
TP47	1a	94450009	REPART MINI WRAP	385-0358-1-40-40-0	.025		COMATEL
TP48	1a	94450009	REPART MINI WRAP	385-0358-1-40-40-0	.025		COMATEL
U1		95360204	CIRCUIT INTEGRE	MAX233	1	MAXIM	DIP20
U2	1m	95300175	CIRCUIT INTEGRE	74F74SC	1	NATIONAL	SO14
U3	3m	95320000	CIRCUIT INTEGRE	27C256 120nS	1		DIP28
U3	3a	00010147	PROGRAMME	"MOPKOM"	1		
U4		95300082	CIRCUIT INTEGRE	DSP56001-FC33	1	MOTOROLA	PQFP132
U5		95300092	CIRCUIT INTEGRE	PAL22V10H-10PC	1	ADVANCED	DIP24 Et
U5	3a	00010138	PROGRAMME	"MODECOD2"	1		
U7	7m	95300090	CIRCUIT INTEGRE	71256-L35Y	1	IDT	SSOP28
U8	7m	95300090	CIRCUIT INTEGRE	71256-L35Y	1	IDT	SSOP28
U9	7m	95300090	CIRCUIT INTEGRE	71256-L35Y	1	IDT	SSOP28
U10		95300092	CIRCUIT INTEGRE	PAL22V10H-10PC	1	ADVANCED	DIP24 Et
U10	3a	00010137	PROGRAMME	"MODECOD1"	1		
U11		95300088	CIRCUIT INTEGRE	7130-LA35J	1	IDT	PLCC52
U14		95360161	CIRCUIT INTEGRE	MAX697	1	MAXIM	DIP16
U16	1m	95300181	CIRCUIT INTEGRE	74FCT244ASO	1	IDT	SO20L
U18		95300088	CIRCUIT INTEGRE	7130-LA35J	1	IDT	PLCC52
U19		95300093	CIRCUIT INTEGRE	PAL22V10H-15PC	1	ADVANCED	DIP24 Et
U19	3a	00010140	PROGRAMME	"MOERR1"	1		
U23		95360208	CIRCUIT INTEGRE	PAL22V10Q-25PC	1	ADVANCED	DIP24 Et
U23	3a	00010131	PROGRAMME	"SROMAD"	1		
U24		95300093	CIRCUIT INTEGRE	PAL22V10H-15PC	1	ADVANCED	DIP24 Et
U24	3a	00010132	PROGRAMME	"ARMMAD"	1		
U25		95300088	CIRCUIT INTEGRE	7130-LA35J	1	IDT	PLCC52
U28		95300093	CIRCUIT INTEGRE	PAL22V10H-15PC	1	ADVANCED	DIP24 Et
U28	3a	00010141	PROGRAMME	"MOERR2"	1		
U37		95300083	CIRCUIT INTEGRE	AM7968-125PC	1	AMD	DIP28
U39	1m	95300180	CIRCUIT INTEGRE	74F00SC	1	NATIONAL	SO14
U40		95360208	CIRCUIT INTEGRE	PAL22V10Q-25PC	1	ADVANCED	DIP24 Et
U40	3a	00010142	PROGRAMME	"XSTMADD"	1		
U41	1m	95300097	CIRCUIT INTEGRE	XC3042-125PQ100C	1	XILINX	PQFP100
U42		95161075	CIRCUIT INTEGRE	5962-7730	1	HP	DIP14
U43	2m	95300108	CIRCUIT INTEGRE	PC 74HC123T	1	PHILIPS	SO16
U44		95300089	CIRCUIT INTEGRE	7134-LA35J	1	IDT	PLCC52
U45	4m	95300202	CIRCUIT INTEGRE	PC74HC151T	1	PHILIPS	SO16
U46		95300092	CIRCUIT INTEGRE	PAL22V10H-10PC	1	ADVANCED	DIP24 Et
U49	3a	00010139	PROGRAMME	"MODECOD3"	1		
U51		94420255	BNC COUDE 75 OHMS	54-21-2031	1	STUDER	
U55	1m	95300085	CIRCUIT INTEGRE	XC3042-100PQ100C	1	XILINX	PQFP100
U56	1m	95300085	CIRCUIT INTEGRE	XC3042-100PQ100C	1	XILINX	PQFP100
U62		95300096	CIRCUIT INTEGRE	XC1765-PD8C	1	XILINX	DIP8
U62	3a	00010143	PROGRAMME	"MOPRXIL1"	1		
U63	1m	95300179	CIRCUIT INTEGRE	74FCT833BSO	1	IDT	SO24L
U65		95300085	CIRCUIT INTEGRE	XC3042-100PQ100C	1	XILINX	PQFP100
U67	1m	95300179	CIRCUIT INTEGRE	74FCT833BSO	1	IDT	SO24L
U68		95360202	CIRCUIT INTEGRE	PAL16R4-7	1		DIP20
U68	3a	00010041	PROGRAMME	"SONRD"	1		DIP20
U70		95360202	CIRCUIT INTEGRE	PAL16R4-7	1		DIP20
U70	3a	00010042	PROGRAMME	"SONWR"	1		DIP20
U72		95360203	CIRCUIT INTEGRE	DS1000M-60	1		DIP8
U74		95300096	CIRCUIT INTEGRE	XC1765-PD8C	1	XILINX	DIP8
U74	3a	00010144	PROGRAMME	"MOPRXILZ"	1		
U75		95300096	CIRCUIT INTEGRE	XC1765-PD8C	1	XILINX	DIP8
U75	3a	00010145	PROGRAMME	"MOPRXIL3"	1		
U79		95360201	CIRCUIT INTEGRE	74AS250	1		DIP24 Et
U80	1m	95300179	CIRCUIT INTEGRE	74FCT833BSO	1	IDT	SO24L
U81	1m	95300179	CIRCUIT INTEGRE	74FCT833BSO	1	IDT	SO24L
U82	1m	95300179	CIRCUIT INTEGRE	74FCT833BSO	1	IDT	SO24L
U83		95300088	CIRCUIT INTEGRE	7130-LA35J	1	IDT	PLCC52
U84		95300097	CIRCUIT INTEGRE	XC3042-125PQ100C	1	XILINX	PQFP100
U85		95300106	CIRCUIT INTEGRE	PC 74HC85T	1	PHILIPS	SO16
U88		95300085	CIRCUIT INTEGRE	XC3042-100PQ100C	1	XILINX	PQFP100
U90		95300088	CIRCUIT INTEGRE	7130-LA35J	1	IDT	PLCC52
U97		95300106	CIRCUIT INTEGRE	PC 74HC85T	1	PHILIPS	SO16
U99		95300088	CIRCUIT INTEGRE	7130-LA35J	1	IDT	PLCC52
U106		95300088	CIRCUIT INTEGRE	7130-LA35J	1	IDT	PLCC52
U107		95300088	CIRCUIT INTEGRE	7130-LA35J	1	IDT	PLCC52
U110		95300088	CIRCUIT INTEGRE	7130-LA35J	1	IDT	PLCC52
U111	1a	95360114	CIRCUIT INTEGRE	74F08	1		DIP14
U112	2m	95366008	CIRCUIT INTEGRE	74LS244	1		DIP20
U127		95300083	CIRCUIT INTEGRE	AM7968-125PC	1	AMD	DIP28
U128		94420255	BNC COUDE 75 OHMS	54-21-2031	1	STUDER	
U137		95300089	CIRCUIT INTEGRE	7134-LA35J	1	IDT	PLCC52
U139		95300088	CIRCUIT INTEGRE	7130-LA35J	1	IDT	PLCC52
U142	4m	95300202	CIRCUIT INTEGRE	PC74HC151T	1	PHILIPS	SO16
USR1		94540008	ROUE CODEUSE	422055	1	HOPT-SHU	
X1		94480313	SUPPORT 24Pts TROI		8		
X2		94480305	SUPPORT 20Pts		2		
X3		94480301	SUPPORT 8Pts		3		
X4		94480303	SUPPORT 16Pts		1		
X5		94480308	SUPPORT 28Pts LARGE		1		
X6		94480034	SUPPORT 8Pts COUDE	(6 Pts UTILES)	1	ANTELEC	
X7		94336008	SUPPORT 14Pts COUDE		1	ANTELEC	
X8		94330007	SUPPORT LED		2	SHURTER	
X9		94320003	CAVALIER FEM. ISOLE	313-1731-0-00-406	7	COMATEL	
X10		98230043	POIGNEE EXTRACTEUR	HAUTE REF:131177	0.1	SEEM	
X11		98230044	POIGNEE EXTRACTEUR	BASSE REF: 131178	0.1	SEEM	
X12	1m	97613203	VIS V106	F/92 M2,5 X 6	10		
X13		97612202	VIS V126	M2,5 x 5	2		
X14	1m	97612205	VIS V126	M2,5 x 8	9		
X15		97715007	RONDELLE V151	MU 2,5	2		
X16		98230045	OEILLET + VIS	REF: 492959	0.02		
X17	1a	94480302	SUPPORT 14Pts		1		
X18	1a	94480023	VERROUILLAGE FEMELLE	8630-01-060	2	SOURIAU	
X19	1a	97880002	ENTRETOISE EXALIS 4	LONGUEUR 5mm	6	ACCEL	
X20	1a	97718006	ENTRETOISE LISSE	ø3 L1,5 ACIER	7		
X21	1a	97610011	ENTRETOISE ENMET 19	LONGUEUR 12	7	ACCEL	
X22	1a	97613212	VIS	F/90 M2,5X25	1		
X23	1a	97713006	ECROU	M2,5	1		
X24	3a	97110039	BOUCHE TROU METAL	7603	2	KEYSTONE	
SW3			PONT_SOUDURE		1		
SW4			PONT_SOUDURE		1		
SW5			PONT_SOUDURE		1		
SW14			PONT_SOUDURE		1		
SW15			PONT_SOUDURE		1		
SW16			PONT_SOUDURE		1		
SW17			PONT_SOUDURE		1		
SW18			PONT_SOUDURE		1		
J6			CIRCUIT INTEGRE	SN 74ABT16245DL	1	TEXAS	SSOP48
J12			CIRCUIT INTEGRE	74FCT652ASO	1	IDT	SO24L
J13			CIRCUIT INTEGRE	74FCT652ASO	1	IDT	SO24L
J15			CIRCUIT INTEGRE	74FCT652ASO	1	IDT	SO24L
J17			CIRCUIT INTEGRE	SN 74ABT16245DL	1	TEXAS	SSOP48
J20			CIRCUIT INTEGRE	74FCT157ASO	1	IDT	SO16
J21			CIRCUIT INTEGRE	74FCT157ASO	1	IDT	SO16
J22			CIRCUIT INTEGRE	SN 74ABT16245DL	1	TEXAS	SSOP48
J26			CIRCUIT INTEGRE	SN 74ABT16245DL	1	TEXAS	SSOP48
J27			CIRCUIT INTEGRE	74FCT652ASO	1	IDT	SO24L
J29			CIRCUIT INTEGRE	SN 74ABT16245DL	1	TEXAS	SSOP48
J30			CIRCUIT INTEGRE	74FCT652ASO	1	IDT	SO24L
J31			CIRCUIT INTEGRE	74F280SC	1	NATIONAL	SO14
J32			CIRCUIT INTEGRE	74F280SC	1	NATIONAL	SO14
J33			CIRCUIT INTEGRE	74F280SC	1	NATIONAL	SO14
J34			CIRCUIT INTEGRE	74F280SC	1	NATIONAL	SO14
J35			CIRCUIT INTEGRE	SN 74ABT16244DL	1	TEXAS	SSOP48
J36			CIRCUIT INTEGRE	74FCT652ASO	1	IDT	SO24L
J38			CIRCUIT INTEGRE	74FCT245ASO	1	IDT	SO20L
J53			CIRCUIT INTEGRE	74FCT652ASO	1	IDT	SO24L
J54	1s		CIRCUIT INTEGRE	SN 74ABT16244DL	0	TEXAS	SSOP48
J60			CIRCUIT INTEGRE	74FCT157ASO	1	IDT	SO16
J61			CIRCUIT INTEGRE	74FCT157ASO	1	IDT	SO16
J64			CIRCUIT INTEGRE	74FCT652ASO	1	IDT	SO24L
J66			CIRCUIT INTEGRE	74FCT652ASO	1	IDT	SO24L
J69			CIRCUIT INTEGRE	74FCT652ASO	1	IDT	SO24L
J71			CIRCUIT INTEGRE	74FCT821BSO	1	IDT	SO24L
J73			CIRCUIT INTEGRE	74FCT821BSO	1	IDT	SO24L
J76			CIRCUIT INTEGRE	74FCT821BSO	1	IDT	SO24L
J77			CIRCUIT INTEGRE	74FCT821BSO	1	IDT	SO24L
J78			CIRCUIT INTEGRE	74FCT821BSO	1	IDT	SO24L
U86			CIRCUIT INTEGRE	74FCT652ASO	1	IDT	SO24L
U87			CIRCUIT INTEGRE	SN 74ABT16244DL	1	TEXAS	SSOP48
U92			CIRCUIT INTEGRE	74F280SC	1	NATIONAL	SO14
U93			CIRCUIT INTEGRE	74F280SC	1	NATIONAL	SO14
U94			CIRCUIT INTEGRE	74F280SC	1	NATIONAL	SO14
U95			CIRCUIT INTEGRE	74F280SC	1	NATIONAL	SO14
U100			CIRCUIT INTEGRE	SCAN 18374T SSC	1	NS	SSOP56
U101			CIRCUIT INTEGRE	74HCT157ATSO	1	IDT	SO16
U102			CIRCUIT INTEGRE	SCAN 18374T SSC	1	NS	SSOP56
U103			CIRCUIT INTEGRE	74HCT157ATSO	1	IDT	SO16
U104			CIRCUIT INTEGRE	SCAN 18374T SSC	1	NS	SSOP56
U105			CIRCUIT INTEGRE	7406D	1	RTC	SO14
U108			CIRCUIT INTEGRE	SCAN 18374T SSC	1	NS	SSOP56
U113	1a		CIRCUIT INTEGRE	74F27	1		SO14
U114	1a		CIRCUIT INTEGRE	74F27	1		SO14
U152			CIRCUIT INTEGRE	74HCT157ATSO	1	IDT	SO16
U153			CIRCUIT INTEGRE	74HCT157ATSO	1	IDT	SO16
U206			CIRCUIT INTEGRE	SN 74ABT16245DL	1	TEXAS	SSOP48
U207			CIRCUIT INTEGRE	SN 74ABT16245DL	1	TEXAS	SSOP48
C1	1m		CONDENSATEUR 2C1	10 nF 20%	1		1206
C2	1m		CONDENSATEUR 2C1	10 nF 20%	1		1206
C3	1m		CONDENSATEUR 2C1	10 nF 20%	1		1206
C4	1m		CONDENSATEUR 2C1	10 nF 20%	1		1206
C5	1m		CONDENSATEUR 2C1	10 nF 20%	1		1206
C6	1m		CONDENSATEUR 2C1	10 nF 20%	1		1206
C7	1m		CONDENSATEUR 2C1	10 nF 20%	1		1206
C8	1m		CONDENSATEUR 2C1	10 nF 20%	1		1206
C9	1m		CONDENSATEUR 2C1	10 nF 20%	1		1206
C10	1m		CONDENSATEUR 2C1	10 nF 20%	1		1206
C11	1m		CONDENSATEUR 2930	47µF 10V	1		CASE D
C12	1m		CONDENSATEUR 2C1	10 nF 20%	1		1206
C13	1m		CONDENSATEUR 2C1	10 nF 20%	1		1206
C14	1m		CONDENSATEUR 2930	47µF 10V	1		CASE D
C15	1m		CONDENSATEUR 2C1	10 nF 20%	1		1206
C16	1m		CONDENSATEUR 2C1	47nF 20%	1		1206
C17			CONDENSATEUR 2C1	100nF 20%	1		1206
C18	1m		CONDENSATEUR 2C1	10 nF 20%	1		1206
C19	1m		CONDENSATEUR 2C1	10 nF 20%	1		1206
C20	1m		CONDENSATEUR 2C1	10 nF 20%	1		1206
C21	1m		CONDENSATEUR 2C1	10 nF 20%	1		1206
C22	1m		CONDENSATEUR 2C1	10 nF 20%	1		1206
C23	1m		CONDENSATEUR 2C1	10 nF 20%	1		1206
C24	1m		CONDENSATEUR 2C1	10 nF 20%	1		1206
C25	1m		CONDENSATEUR 2C1	10 nF 20%	1		1206
C26	1m		CONDENSATEUR 2C1	10 nF 20%	1		1206
C27	1m		CONDENSATEUR 2C1	10 nF 20%	1		1206
C28			CONDENSATEUR 2C1	100nF 20%	1		1206
C29	1m		CONDENSATEUR 2C1	1nF 20%	1		1206
C30	1m		CONDENSATEUR 2C1	10 nF 20%	1		1206
C31	1m		CONDENSATEUR 2C1	10 nF 20%	1		1206
C32	1m		CONDENSATEUR 2C1	10 nF 20%	1		1206
C33	1m		CONDENSATEUR 2C1	10 nF 20%	1		1206
C34	1m		CONDENSATEUR 2C1	10 nF 20%	1		1206
C35	1m		CONDENSATEUR 2C1	10 nF 20%	1		1206
C36	4m		CONDENSATEUR 5950	10µF 16V	1		CASE B
C37	1m		CONDENSATEUR 2C1	10 nF 20%	1		1206
C38			CONDENSATEUR 2C1	100nF 20%	1		1206
C39	1m		CONDENSATEUR 2C1	10 nF 20%	1		1206
C40	4m		CONDENSATEUR 5950	10µF 16V	1		CASE B
C41	1m		CONDENSATEUR 2C1	10 nF 20%	1		1206
C42	1m		CONDENSATEUR 2C1	10 nF 20%	1		1206
C43	1m		CONDENSATEUR 2C1	10 nF 20%	1		1206
C44	1m		CONDENSATEUR 2C1	10 nF 20%	1		1206
C45	1m		CONDENSATEUR 2C1	10 nF 20%	1		1206
C46	1m		CONDENSATEUR 2C1	10 nF 20%	1		1206
C47	1m		CONDENSATEUR 2C1	10 nF 20%	1		1206
C49			CONDENSATEUR 2C1	100nF 20%	1		1206
C50	1m		CONDENSATEUR 2C1	10 nF 20%	1		1206
C51	1m		CONDENSATEUR 2C1	10 nF 20%	1		1206
C52			CONDENSATEUR 2C1	100nF 20%	1		1206
C53			CONDENSATEUR 2C1	100nF 20%	1		1206
C54			CONDENSATEUR 2C1	1nF 20%	1		1206
C55	1m		CONDENSATEUR 2C1	10 nF 20%	1		1206
C56	1m		CONDENSATEUR 2C1	10 nF 20%	1		1206
C57			CONDENSATEUR 2C1	1nF 20%	1		1206
C58	1m		CONDENSATEUR 2C1	10 nF 20%	1		1206
C59	1m		CONDENSATEUR 2C1	10 nF 20%	1		1206
C60	1m		CONDENSATEUR 2C1	10 nF 20%	1		1206
C61	4m		CONDENSATEUR 5950	10µF 16V	1		CASE B
C62			CONDENSATEUR 2C1	100nF 20%	1		1206
C63			CONDENSATEUR 2C1	1nF 20%	1		1206
C64	1m		CONDENSATEUR 2C1	10 nF 20%	1		1206
C65	1m		CONDENSATEUR 2C1	10 nF 20%	1		1206

Optical Madisono 2 Madi Output Board 42.125.304.01
Coax Madisono 2 Madi Output Board 42.125.304.11

REPERE	IND	COMPOSANT	DESIGNATION	VALEUR	QTE	FABRIQ.	BOITIER
C73	1m		CONDENSATEUR 2C1	1nF 20%	1		1206
C75	1m		CONDENSATEUR 2C1	47nF 20%	1		1206
C77	1m		CONDENSATEUR 2C1	1nF 20%	1		1206
C79	1m		CONDENSATEUR 2C1	47nF 20%	1		1206
C80	1m		CONDENSATEUR 2C1	1nF 20%	1		1206
C81	1m		CONDENSATEUR 2C1	10 nF 20%	1		1206
C82	1m		CONDENSATEUR 2C1	10 nF 20%	1		1206
C83	1m		CONDENSATEUR 2C1	10 nF 20%	1		1206
C84	1m		CONDENSATEUR 2C1	10 nF 20%	1		1206
C85	1m		CONDENSATEUR 2C1	33pF 20%	1		1206
C86	1m		CONDENSATEUR 2C1	33pF 20%	1		1206
C87	1m		CONDENSATEUR 2C1	33pF 20%	1		1206
C88	1m		CONDENSATEUR 2C1	33pF 20%	1		1206
C89	1m		CONDENSATEUR 2C1	10 nF 20%	1		1206
C90	1m		CONDENSATEUR 2C1	47nF 20%	1		1206
C91	1m		CONDENSATEUR 2C1	10 nF 20%	1		1206
C92	1m		CONDENSATEUR 2C1	10 nF 20%	1		1206
C93	1m		CONDENSATEUR 2C1	10 nF 20%	1		1206
C94	1m		CONDENSATEUR 2C1	10 nF 20%	1		1206
C95	1m		CONDENSATEUR 2C1	33pF 20%	1		1206
C96	1m		CONDENSATEUR 2C1	33pF 20%	1		1206
C97	1m		CONDENSATEUR 2C1	10 nF 20%	1		1206
C98	1m		CONDENSATEUR 2C1	10 nF 20%	1		1206
C99	1m		CONDENSATEUR 2C1	10 nF 20%	1		1206
C100			CONDENSATEUR 2C1	100nF 20%	1		1206
C107	1m		CONDENSATEUR 2C1	10 nF 20%	1		1206
C111	1m		CONDENSATEUR 2C1	10 nF 20%	1		1206
C114	1m		CONDENSATEUR 2C1	10 nF 20%	1		1206
C140	1m		CONDENSATEUR 2C1	47nf 20%	1		1206
C141	1m		CONDENSATEUR 2C1	1nF 20%	1		1206
C143			CONDENSATEUR 2C1	100nF 20%	1		1206
C144			CONDENSATEUR 2C1	100nF 20%	1		1206
C145			CONDENSATEUR 2C1	100nF 20%	1		1206
C146			CONDENSATEUR 2C1	100nF 20%	1		1206
C147			CONDENSATEUR 2C1	1nF 20%	1		1206
C148			CONDENSATEUR 2C1	1nF 20%	1		1206
C149			CONDENSATEUR 2C1	1nF 20%	1		1206
C150	4m		CONDENSATEUR 595D	10µF 16V	1		CASE B
C152	1m		CONDENSATEUR NPO	39PF 5%	1		1206
C153	1m		CONDENSATEUR NPO	39PF 5%	1		1206
C154	1m		CONDENSATEUR 2C1	10 nF 20%	1		1206
C155	1m		CONDENSATEUR 2C1	10 nF 20%	1		1206
C156	1m		CONDENSATEUR 2C1	10 nF 20%	1		1206
C157	1m		CONDENSATEUR 2C1	10 nF 20%	1		1206
C158	1m		CONDENSATEUR 2C1	10 nF 20%	1		1206
C159	1m		CONDENSATEUR 2C1	10 nF 20%	1		1206
C160	1m		CONDENSATEUR 2C1	10 nF 20%	1		1206
C161	1m		CONDENSATEUR 2C1	10 nF 20%	1		1206
C162	1m		CONDENSATEUR 2C1	10 nF 20%	1		1206
C163	1m		CONDENSATEUR 2C1	10 nF 20%	1		1206
C164	1m		CONDENSATEUR 2C1	10 nF 20%	1		1206
C165	1m		CONDENSATEUR 2C1	10 nF 20%	1		1206
C166	1m		CONDENSATEUR 2C1	10 nF 20%	1		1206
C167	1m		CONDENSATEUR 2C1	10 nF 20%	1		1206
C168	1m		CONDENSATEUR 2C1	10 nF 20%	1		1206
C169	1m		CONDENSATEUR 2C1	10 nF 20%	1		1206
C170	1m		CONDENSATEUR 2C1	10 nF 20%	1		1206
C171	1m		CONDENSATEUR 2C1	10 nF 20%	1		1206
C172	1m		CONDENSATEUR 2C1	10 nF 20%	1		1206
C173	1m		CONDENSATEUR 2C1	10 nF 20%	1		1206
C174	1m		CONDENSATEUR 2C1	10 nF 20%	1		1206
C175	1m		CONDENSATEUR 2C1	10 nF 20%	1		1206
C176	1m		CONDENSATEUR 2C1	10 nF 20%	1		1206
C177	1m		CONDENSATEUR 2C1	10 nF 20%	1		1206
C178	1m		CONDENSATEUR 2C1	10 nF 20%	1		1206
C179	1m		CONDENSATEUR 2C1	10 nF 20%	1		1206
C180	1m		CONDENSATEUR 2C1	10 nF 20%	1		1206
C181	1m		CONDENSATEUR 2C1	10 nF 20%	1		1206
C182	1m		CONDENSATEUR 2C1	10 nF 20%	1		1206
C183	1m		CONDENSATEUR 2C1	10 nF 20%	1		1206
C184	1m		CONDENSATEUR 2C1	10 nF 20%	1		1206
C185	1m		CONDENSATEUR 2C1	10 nF 20%	1		1206
C186	1m		CONDENSATEUR 2C1	10 nF 20%	1		1206
C187	1m		CONDENSATEUR 2C1	10 nF 20%	1		1206
C188	1m		CONDENSATEUR 2C1	10 nF 20%	1		1206
C189	1m		CONDENSATEUR 2C1	10 nF 20%	1		1206
C190	1m		CONDENSATEUR 2C1	10 nF 20%	1		1206
C191	1m		CONDENSATEUR 2C1	10 nF 20%	1		1206
C192	1m		CONDENSATEUR 2C1	10 nF 20%	1		1206
C193	1m		CONDENSATEUR 2C1	10 nF 20%	1		1206
C194	1m		CONDENSATEUR 2C1	10 nF 20%	1		1206
C195	1m		CONDENSATEUR 2C1	10 nF 20%	1		1206
C196	1m		CONDENSATEUR 2C1	10 nF 20%	1		1206
C197	1m		CONDENSATEUR 2C1	10 nF 20%	1		1206
C198	1m		CONDENSATEUR 2C1	10 nF 20%	1		1206
C199	1m		CONDENSATEUR 2C1	10 nF 20%	1		1206
C200	1m		CONDENSATEUR 2C1	10 nF 20%	1		1206
C201	1m		CONDENSATEUR 2C1	10 nF 20%	1		1206
C202	1m		CONDENSATEUR 2C1	10 nF 20%	1		1206
C203	1m		CONDENSATEUR 2C1	10 nF 20%	1		1206
C204	1m		CONDENSATEUR 2C1	10 nF 20%	1		1206
C205	1m		CONDENSATEUR 293D	47µF 10V	1		CASE D
C206	1m		CONDENSATEUR 293D	47µF 10V	1		CASE D
C207	1m		CONDENSATEUR 293D	47µF 10V	1		CASE D
C210	1m		CONDENSATEUR 2C1	47nF 20%	1		1206
C211	1m		CONDENSATEUR 2C1	1nF 20%	1		1206
C212	1m		CONDENSATEUR 2C1	47nF 20%	1		1206
C213	1m		CONDENSATEUR 2C1	1nF 20%	1		1206
C214	1m		CONDENSATEUR 2C1	47nF 20%	1		1206
C215	1m		CONDENSATEUR 2C1	1nF 20%	1		1206
C216	1a		CONDENSATEUR 293D	47µF 10V	1		CASE D
C217	1a		CONDENSATEUR 293D	47µF 10V	1		CASE D
C218	1a		CONDENSATEUR 293D	47µF 10V	1		CASE D
C219	1a		CONDENSATEUR 293D	47µF 10V	1		CASE D
C220	1a		CONDENSATEUR 293D	47µF 10V	1		CASE D
C221	1a		CONDENSATEUR 293D	47µF 10V	1		CASE D

SCHEMATA / CIRCUIT DIAGRAMS

Sommation Summing Board 42.355.152.35

Sommation Summing Board 42.355.152.35

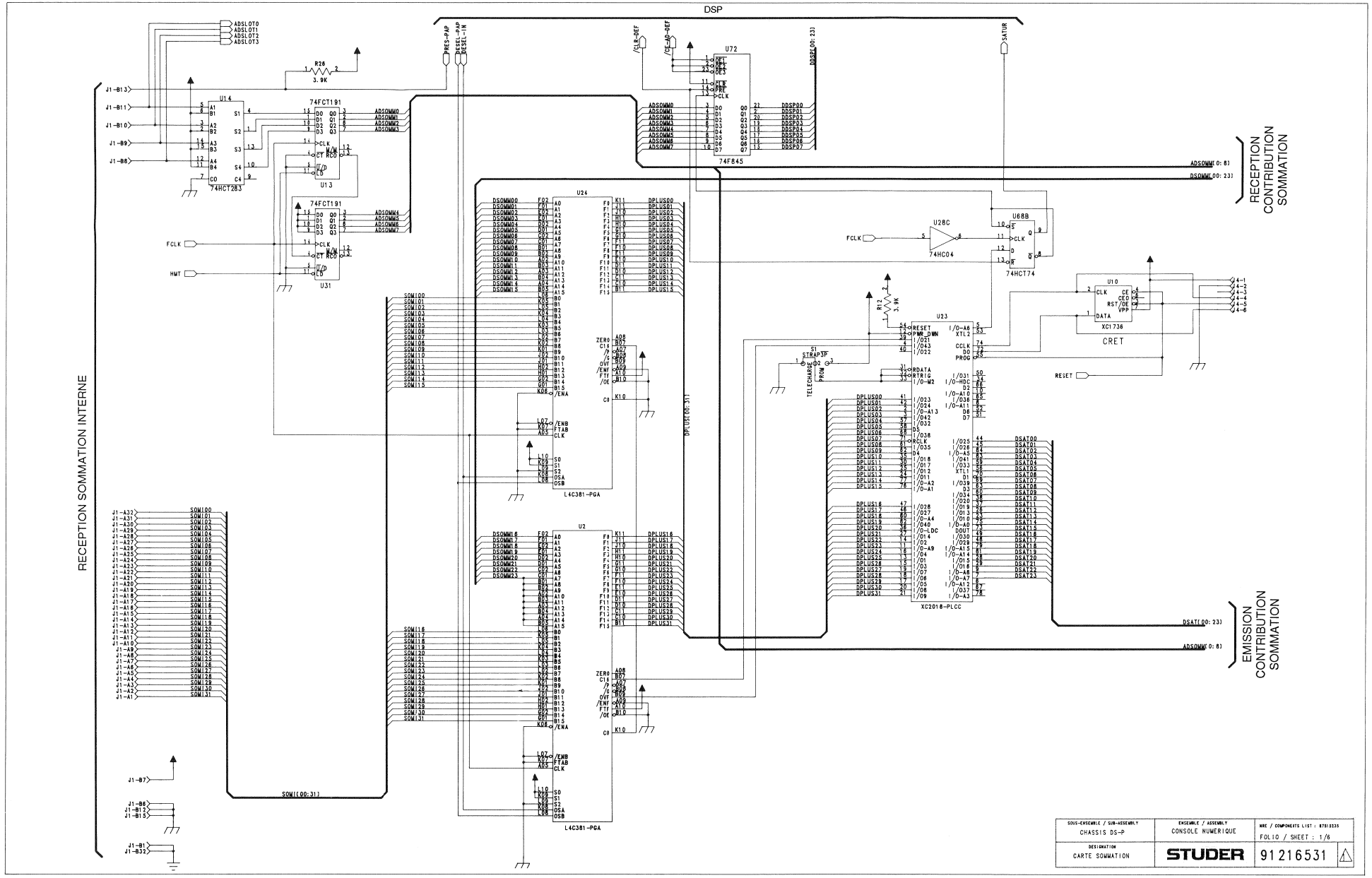

Sommation Summing Board 42.355.152.35

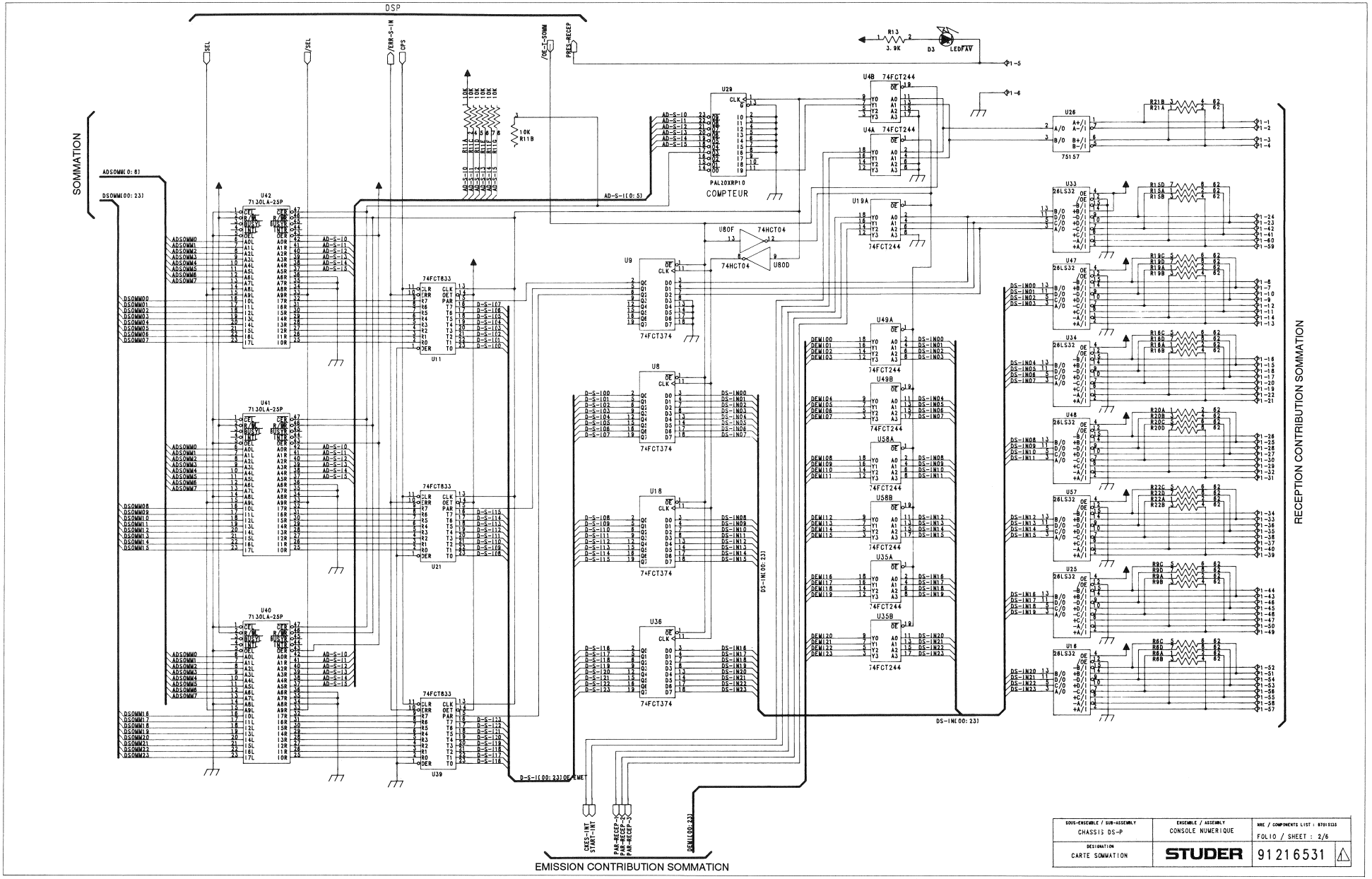

Sommation Summing Board 42.355.152.35

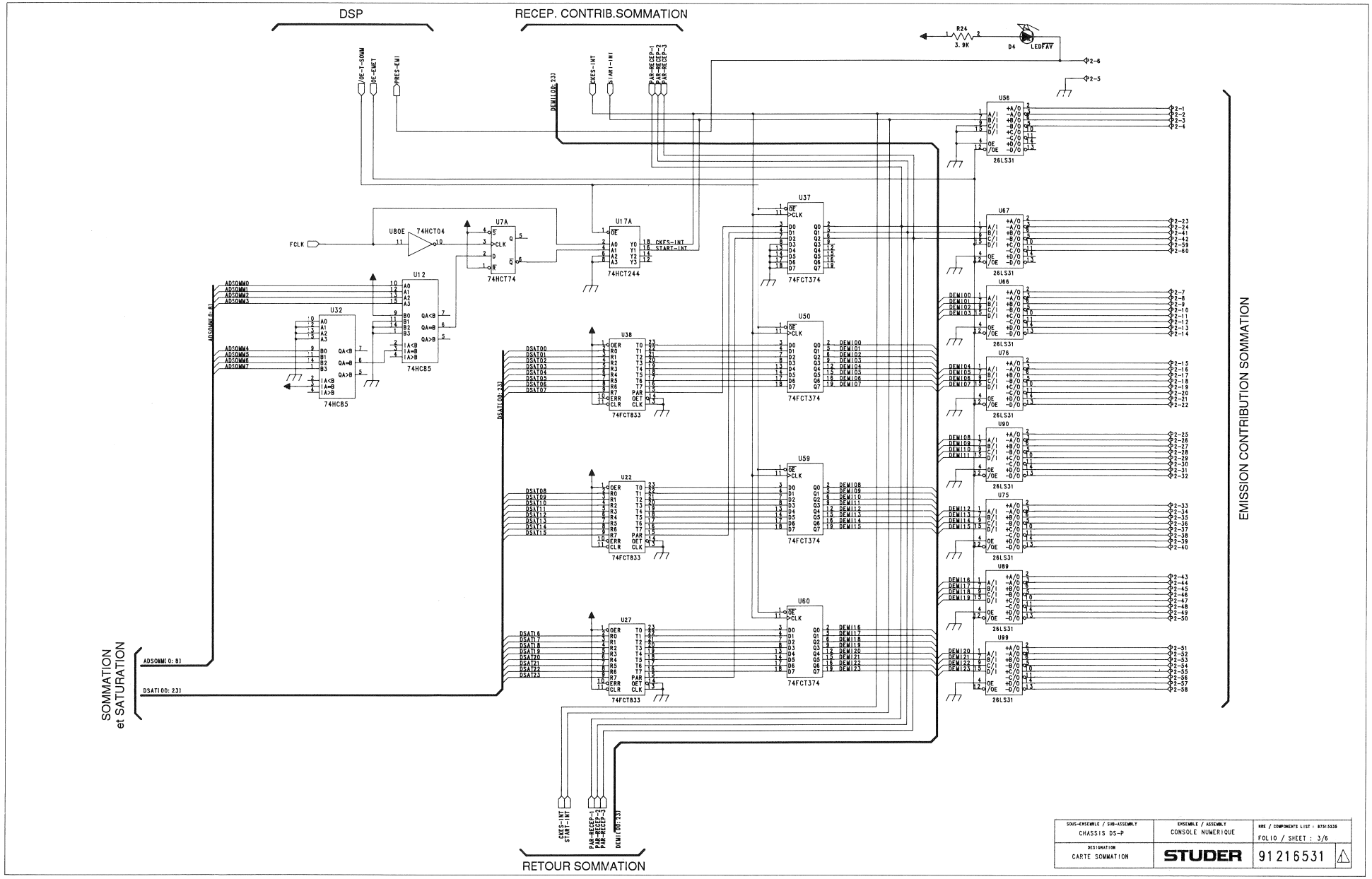

SOUS-ENSEMBLE / SUB-ASSEMBLY: CHASSIS DS-P	ENSEMBLE / ASSEMBLY: CONSOLE NUMERIQUE	NBE / COMPONENTS LIST : 8751S120
DESIGNATION: CARTE SOMMATION	STUDER	FOLIO / SHEET : 3/6
		91216531

Sommation Summing Board 42.355.152.35

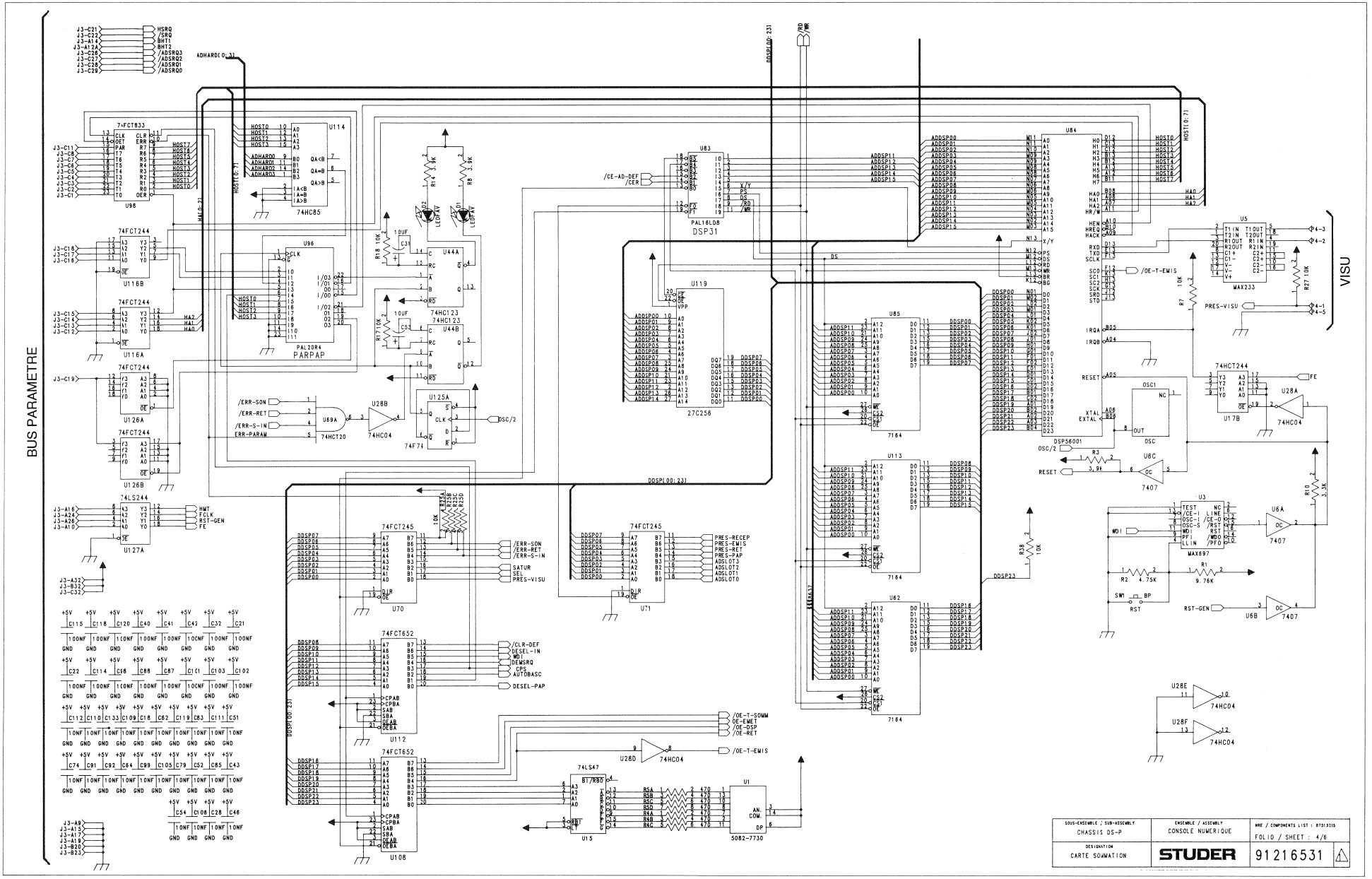

Sommation Summing Board 42.355.152.35

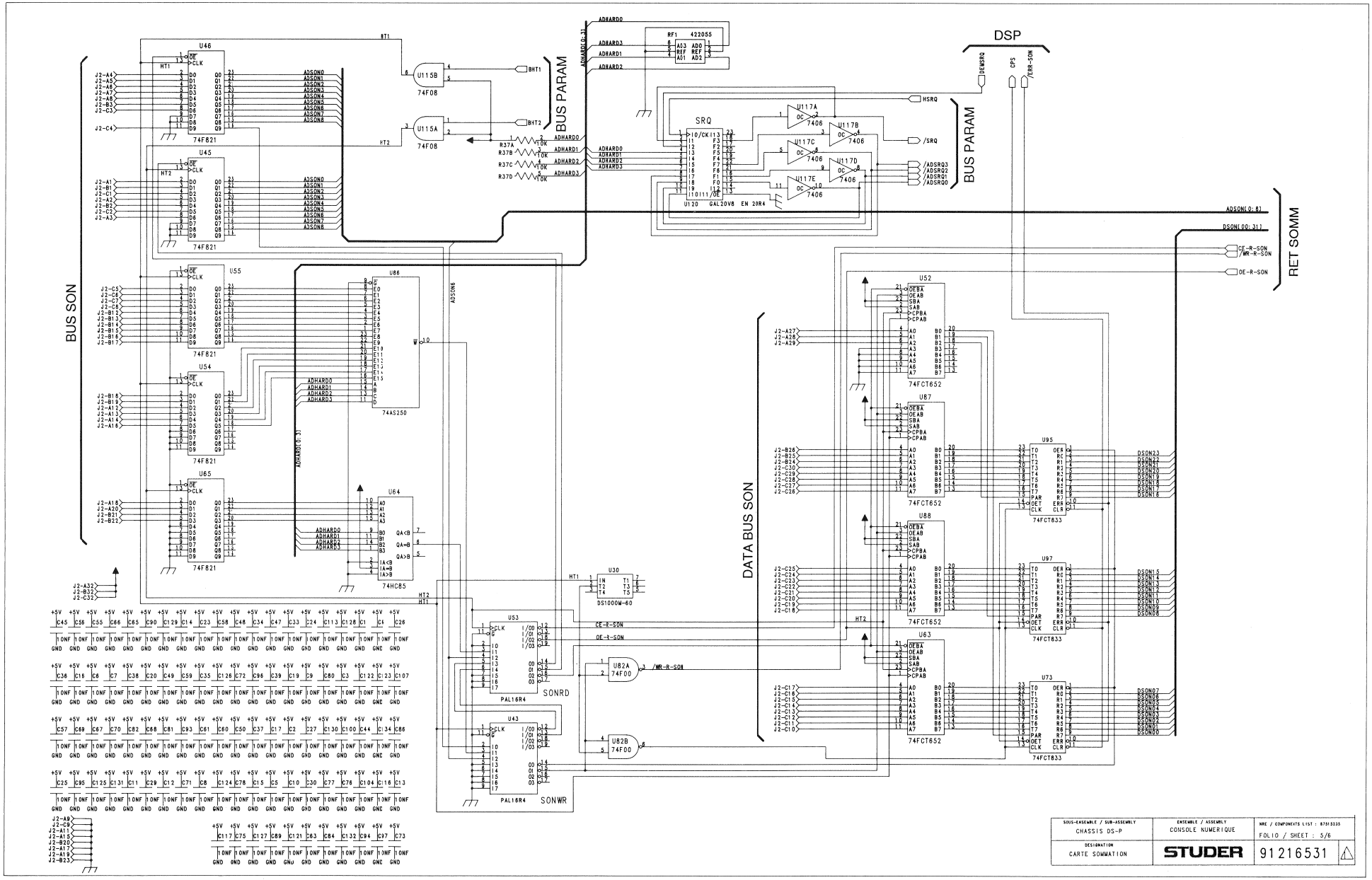

Sommation Summing Board 42.355.152.35

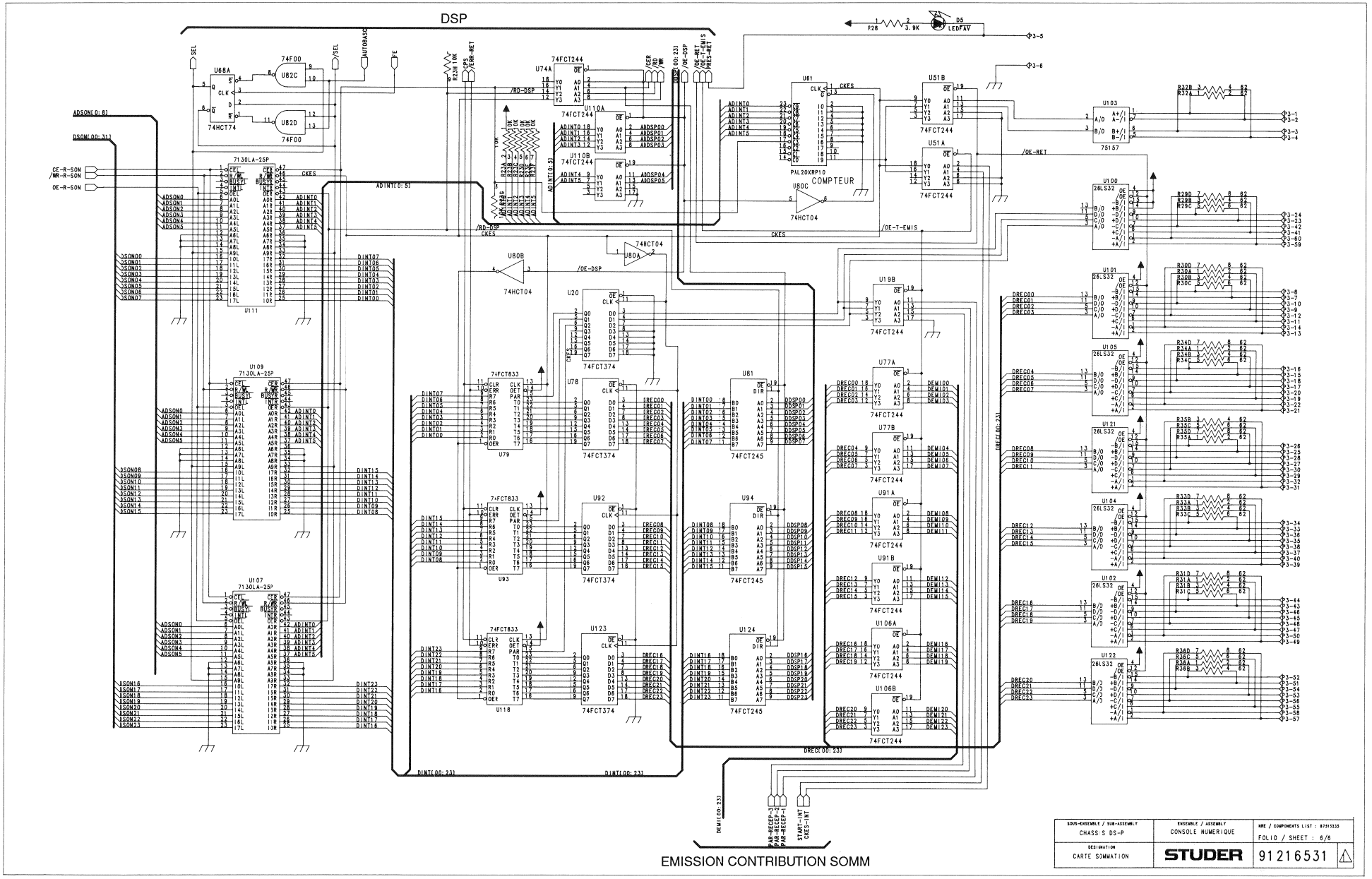

Sommation Summing Board 42.355.152.35

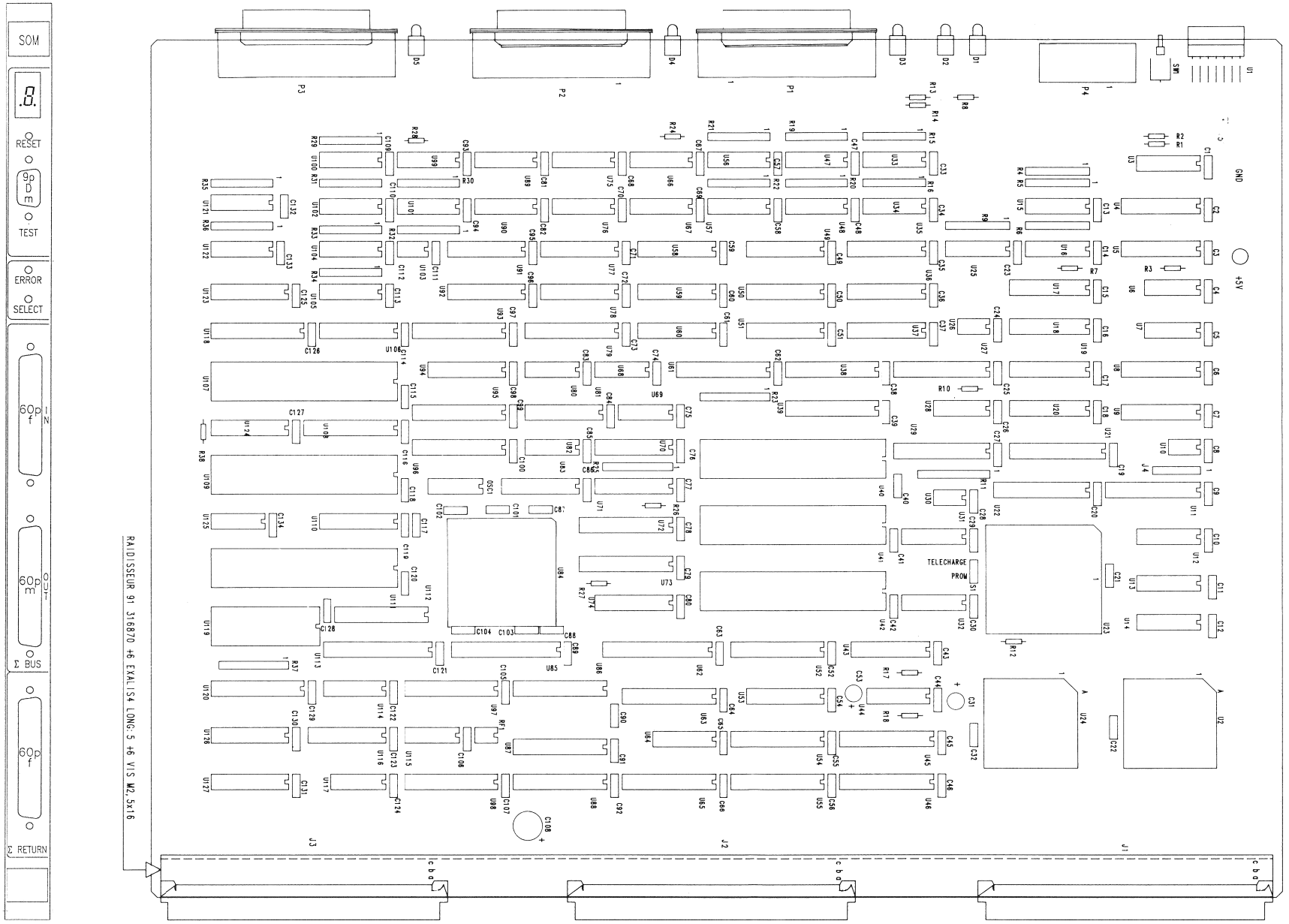

Sommation Summing Board 42.355.152.35

REPERE	IND	COMPOSANT	DESIGNATION	QTE	FABRIQUE
A1		91216531	SCHEMA	1	
A2		91216545	MYLAR DU CIRCUIT	1	
A3		30216545	TEST DE CONFORMITE	1	
A4		91216546	MYLAR DE SERIGRAPHIE	1	
A5		30216546	ECRAN DE SERIGRAPHIE	1	
A6		91216547	MYLAR EPARGNE SOUDURE	1	
A7		91114215	PLAN DE FABRICATION	1	
A8		30114215	OUTIL DE FABRICATION	1	
A9		91114274	PLAN DE MONTAGE	1	
A10		91122143	MODIF CABLAGE	1	
A11		91114189	FACE AVANT	1	
A12		30114189	OUTILLAGE	1	
A13		91216522	MYLAR DE SERIGRAPHIE FACE AVANT	1	
A14		30216522	OUTILLAGE	1	
A15		91216528	PLAN DE SERIGRAPHIE FACE AVANT	1	
A16		98230043	POIGNEE-EXTRACTEUR HAUTE SEEM 131177	0.1	
A17		98230044	POIGNEE-EXTRACTEUR BASSE SEEM 131178	0.1	
A18		97613203	VIS V106 F/90 M2,5x6	2	
A19		97612202	VIS V126 M2,5x5	2	
A20		97612205	VIS V126 M2,5x8	2	
A21		97715007	RONDELLE V151 MU 2,5	2	
A22		91815561	MYLAR ETIQUETTE POIGNEE REPERE D3	1	
A23		30815561	OUTILLAGE	1	
A24		91815593	SERIGRAPHIE ETIQUETTE POIGNEE	1	
A25		98230045	OEILLET+VIS SEEM 492959	0.02	
A26		91815505	ETIQUETTE DE REPERAGE	1	
C1		95555036	10nF-100V	1	
C2		95555036	10nF-100V	1	
C3		95555036	10nF-100V	1	
C4		95555036	10nF-100V	1	
C5		95555036	10nF-100V	1	
C6		95555036	10nF-100V	1	
C7		95555036	10nF-100V	1	
C8		95555036	10nF-100V	1	
C9		95555036	10nF-100V	1	
C10		95555036	10nF-100V	1	
C11		95555036	10nF-100V	1	
C12		95555036	10nF-100V	1	
C13		95555036	10nF-100V	1	
C14		95555036	10nF-100V	1	
C15		95555036	10nF-100V	1	
C16		95555036	10nF-100V	1	
C17		95555036	10nF-100V	1	
C18		95555036	10nF-100V	1	
C19		95555036	10nF-100V	1	
C20		95555036	10nF-100V	1	
C21		95555036	10nF-100V	1	
C22		95555073	10CnF-100V	1	
C23		95555036	10nF-100V	1	
C24		95555036	10nF-100V	1	
C25		95555036	10nF-100V	1	
C26		95555036	10nF-100V	1	
C27		95555036	10nF-100V	1	
C28		95555036	10nF-100V	1	
C29		95555036	10nF-100V	1	
C30		95555036	10nF-100V	1	
C31		95562408	10uF-50V	1	
C32		95555073	100nF-100V	1	
C33		95555036	10nF-100V	1	
C34		95555036	10nF-100V	1	
C35		95555036	10nF-100V	1	
C36		95555036	10nF-100V	1	
C37		95555036	10nF-100V	1	
C38		95555036	10nF-100V	1	
C39		95555036	10nF-100V	1	
C40		95555073	100nF-100V	1	
C41		95555073	100nF-100V	1	
C42		95555073	100nF-100V	1	
C43		95555036	10nF-100V	1	
C44		95555036	10nF-100V	1	
C45		95555036	10nF-100V	1	
C46		95555036	10nF-100V	1	
C47		95555036	10nF-100V	1	
C48		95555036	10nF-100V	1	
C49		95555036	10nF-100V	1	
C50		95555036	10nF-100V	1	
C51		95555036	10nF-100V	1	
C52		95555036	10nF-100V	1	
C53		95562408	10uF-50V	1	
C54		95555036	10nF-100V	1	
C55		95555036	10nF-100V	1	
C56		95555036	10nF-100V	1	
C57		95555036	10nF-100V	1	
C58		95555036	10nF-100V	1	
C59		95555036	10nF-100V	1	
C60		95555036	10nF-100V	1	
C61		95555036	10nF-100V	1	
C62		95555036	10nF-100V	1	
C63		95555036	10nF-100V	1	
C64		95555036	10nF-100V	1	
C65		95555036	10nF-100V	1	
C66		95555036	10nF-100V	1	
C67		95555036	10nF-100V	1	
C68		95555036	10nF-100V	1	
C69		95555036	10nF-100V	1	
C70		95555036	10nF-100V	1	
C71		95555036	10nF-100V	1	
C72		95555036	10nF-100V	1	
C73		95555036	10nF-100V	1	
C74		95555036	10nF-100V	1	
C75		95555036	10nF-100V	1	
C76		95555036	10nF-100V	1	
C77		95555036	10nF-100V	1	
C78		95555036	10nF-100V	1	
C79		95555036	10nF-100V	1	
C80		95555036	10nF-100V	1	
C81		95555036	10nF-100V	1	
C82		95555036	10nF-100V	1	
C83		95555036	10nF-100V	1	
C84		95555036	10nF-100V	1	
C85		95555036	10nF-100V	1	
C86		95555036	10nF-100V	1	
C87		95555073	100nF-100V	1	
C88		95555073	100nF-100V	1	
C89		95555036	10nF-100V	1	
C90		95555036	10nF-100V	1	
C91		95555036	10nF-100V	1	
C92		95555036	10nF-100V	1	
C93		95555036	10nF-100V	1	
C94		95555036	10nF-100V	1	
C95		95555036	10nF-100V	1	
C96		95555036	10nF-100V	1	
C97		95555036	10nF-100V	1	
C98		95555073	100nF-100V	1	
C99		95555036	10nF-100V	1	
C100		95555036	10nF-100V	1	
C101		95555073	100nF-100V	1	
C102		95555073	100nF-100V	1	
C103		95555073	100nF-100V	1	
C104		95555036	10nF-100V	1	
C105		95555036	10nF-100V	1	
C106		95555036	10nF-100V	1	
C107		95555036	10nF-100V	1	
C108		95562420	100uF-25V	1	
C109		95555036	10nF-100V	1	
C110		95555036	10nF-100V	1	
C111		95555036	10nF-100V	1	
C112		95555036	10nF-100V	1	
C113		95555036	10nF-100V	1	
C114		95555073	100nF-100V	1	
C115		95555073	100nF-100V	1	
C116		95555036	10nF-100V	1	
C117		95555036	10nF-100V	1	
C118		95555073	100nF-100V	1	
C119		95555036	10nF-100V	1	
C120		95555073	100nF-100V	1	
C121		95555036	10nF-100V	1	
C122		95555036	10nF-100V	1	
C123		95555036	10nF-100V	1	
C124		95555036	10nF-100V	1	
C125		95555036	10nF-100V	1	
C126		95555036	10nF-100V	1	
C127		95555036	10nF-100V	1	
C128		95555036	10nF-100V	1	
C129		95555036	10nF-100V	1	
C130		95555036	10nF-100V	1	
C131		95555036	10nF-100V	1	
C132		95555036	10nF-100V	1	
C133		95555073	100nF-100V	1	
C134		95555036	10nF-100V	1	
CR..		94330007	SUPPORT AST 0035-9660 SHURTER	5	
D1		95163000	LED\FAV HLMP-1700 ROUGE	1	
D2		95163002	LED\FAV HLMP-179C VERT	1	
D3		95163002	LED\FAV HLMP-179C VERT	1	
D4		95163002	LED\FAV HLMP-179C VERT	1	
D5		95163002	LED\FAV HLMP-179C VERT	1	
J1		94410049	CONNECTEUR 8609-396-71-13-755-000-E1 SOU	1	
J2		94410049	CONNECTEUR 8609-396-71-13-755-000-E1 SOU	1	
J3		94410049	CONNECTEUR 8609-396-71-13-755-000-E1 SOU	1	
J4		94450009	REPARTITEUR W 6C COMATEL (40PTS)	0.15	
OSC1	1	95010005	OSCILLATEUR 20,5MHz HCMOS TYPE 1129	1	NDK
P1		94420150	CON\SUBD\HD\60\F YAMAICHI NBS060-1200-01	1	
P2		94420149	CON\SUBD\HD\60\M YAMAICHI NBP060-1200-01	1	
P3		94420150	CON\SUBD\HD\60\F YAMAICHI NBS060-1200-01	1	
P4		94480021	CONNECTEUR ZEDE 111979-011	1	
R1		95619783	C109 9,76K	1	
R2		95619753	C109 4,75K	1	
R3		95612137	C103 3,9K	1	
R4		95656001	RESEAU RESISTIF 470 OHMS SIL 8.4	1	SFERNICE
R5		95656001	RESEAU RESISTIF 470 OHMS SIL 8.4	1	SFERNICE
R6		95650013	SIL8.4 68 OHMS	1	
R7		95612147	C103 10K	1	
R8		95612137	C103 3,9K	1	
R9		95650013	SIL8.4 68 OHMS	1	
R10		95612137	C103 3,3K	1	
R11		95650031	SIL9.8 10K	1	
R12		95612137	C103 3,9K	1	
R13		95612137	C103 3,9K	1	
R14		95612137	C103 3,9K	1	
R15		95650013	SIL8.4 68 OHMS	1	
R16		95650013	SIL8.4 68 OHMS	1	
R17		95612147	C103 10K	1	
R18		95612147	C103 10K	1	
R19		95650013	SIL8.4 68 OHMS	1	
R20		95650013	SIL8.4 68 OHMS	1	
R21		95650013	SIL8.4 68 OHMS	1	
R22		95650013	SIL8.4 68 OHMS	1	
R23		95650031	SIL9.8 10K	1	
R24		95612137	C103 3,9K	1	
R25		95650031	SIL9.8 10K	1	
R26		95612137	C103 3,9K	1	
R27		95612147	C103 10K	1	
R28		95612137	C103 3,9K	1	
R29		95650013	SIL8.4 68 OHMS	1	
R30		95650013	SIL8.4 68 OHMS	1	
R31		95650013	SIL8.4 68 OHMS	1	
R32		95650013	SIL8.4 68 OHMS	1	
R33		95650013	SIL8.4 68 OHMS	1	
R34		95650013	SIL8.4 68 OHMS	1	
R35		95650013	SIL8.4 68 OHMS	1	
R36		95650013	SIL8.4 68 OHMS	1	
R37		95650031	SIL9.8 10K	1	
R38		95650013	C103 10K	1	
RF1		94540008	422055	1	
S1		94450009	REPARTITEUR W 3C COMATEL (40PTS)	0.08	
SW1		94563003	BOUTON POUSSOIR APR 9233WWCD	1	
U1		95161075	5082-7730	1	
U2		95360212	L4C381	1	
U3		95360161	MAX697	1	
U4		95360175	74FCT244	1	
U5		95360204	MAX233	1	
U6		95332032	7407	1	
U7		95340011	74HCT74	1	
U8		95360177	74FCT374	1	
U9		95360177	74FCT374	1	
U10		95360083	XC1736	1	
U10		00010058	PROGRAMME "CRET"	1	
U11		95340009	74FCT833A-P	1	
U12		95363023	74HC85	1	
U13		95360196	74FCT191	1	
U14		95360227	74HCT283	1	
U15		95366001	74LS47	1	
U16		95343078	26LS32	1	
U17		95360020	74HCT244	1	
U18		95360177	74FCT374	1	
U19		95360175	74FCT244	1	
U20		95360177	74FCT374	1	
U21		95340009	74FCT833A-P	1	
U22		95340009	74FCT833A-P	1	
U23		95360084	XC2018-PLCC	1	
U24		95360212	L4C381	1	
U25		95343078	26LS32	1	
U26		95360043	75157	1	
U27		95340009	74FCT833A-P	1	
U28		95360024	74HC04	1	
U29		95390006	PAL20X10ACNS	1	
U29		00010048	PROGRAMME "COMPTEUR"	1	
U30		95360203	DS1000M-60	1	
U31		95360196	74FCT191	1	
U32	2	95363023	74HC85	1	
U33		95343078	26LS32	1	
U34		95343078	26LS32	1	
U35		95360175	74FCT244	1	
U36		95360177	74FCT374	1	
U37		95360177	74FCT374	1	
U38		95340009	74FCT833A-P	1	
U39		95340009	74FCT833A-P	1	
U40		95360159	7130 L-35-P	1	
U41		95360159	7130 L-35-P ,	1	
U42		95360159	7130 L-35-P	1	
U43		95360202	PAL16R4-7	1	
U43		00010042	PROGRAMME "SONWR"	1	
U44		95360021	74HCT123	1	
U45		95360199	74F821B-P	1	
U46		95360199	74F821B-P	1	
U47		95343078	26LS32	1	
U48		95343078	26LS32	1	
U49		95360175	74FCT244	1	
U50		95360177	74FCT374	1	
U51		95360175	74FCT244	1	
U52		95360192	74FCT652	1	
U53		95360202	PAL16R4-7	1	
U53		00010041	PROGRAMME "SONRD"	1	
U54		95360199	74F821B-P	1	
U55		95360199	74F821B-P	1	
U56		95360111	26LS31	1	
U57		95343078	26LS32	1	
U58		95360175	74FCT244	1	
U59		95360177	74FCT374	1	
U60		95360177	74FCT374	1	
U61		95390006	PAL20X10ACNS	1	
U61		00010048	PROGRAMME "COMPTEUR"	1	
U62		95360207	7164 L-45-TP	1	
U63		95360192	74FCT652	1	
U64		95363023	74HC85	1	
U65		95360199	74F821B-P	1	
U66		95360111	26LS31	1	
U67		95360111	26LS31	1	
U68		95340011	74HCT74	1	
U69		95360134	74HCT20	1	
U70		95360189	74FCT245	1	
U71		95360189	74FCT245	1	
U72		95360226	74FB45	1	
U73		95360200	74FCT8338-P	1	
U74		95360020	74HCT244	1	
U75		95360111	26LS31	1	
U76		95360111	26LS31	1	
U77		95360175	74FCT244	1	
U78		95360177	74FCT374	1	
U79		95340009	74FCT833A-P	1	
U80		95360054	74HCT04	1	
U81		95360189	74FCT245	1	
U82		95360190	74F00	1	
U83		95390001	PAL16L8D	1	
U83		00010035	PROGRAMME "DSP31"	1	
U84		95360216	DSP56001RC20 (20,5 MHz)	1	
U85		95360207	7164 L-45-TP	1	
U86		95360201	74AS250	1	
U87		95360192	74FCT652	1	
U88		95360192	74FCT652	1	
U89		95360111	26LS31	1	
U90		95360111	26LS31	1	
U91		95360175	74FCT244	1	
U92		95360177	74FCT374	1	
U93		95340009	74FCT833A-P	1	
U94		95360189	74FCT245	1	

Sommation Summing Board 42.355.152.35

REPERE	IND	COMPOSANT	DESIGNATION	QTE	FABRIQUE
U95		95360200	74FCT833B-P	1	
U96		95360195	PAL20R4B	1	
U96		00010043	PROGRAMME "PARPAP"	1	
U97		95360200	74FCT833B-P	1	
U98		95340009	74FCT833A-P	1	
U99		95360111	26LS31	1	
U100		95343078	26LS32	1	
U101		95343078	26LS32	1	
U102		95343078	26LS32	1	
U103		95360043	75157	1	
U104		95343078	26LS32	1	
U105		95343078	26LS32	1	
U106		95360175	74FCT244	1	
U107		95360198	7130 L-25-P	1	
U108		95360192	74FCT652	1	
U109		95360198	7130 L-25-P	1	
U110		95360175	74FCT244	1	
U111		95360198	7130 L-25-P	1	
U112		95360192	74FCT652	1	
U113		95360207	7164 L-45-TP	1	
U114		95363023	74HC85	1	
U115		95360114	74F08	1	
U116		95360175	74FCT244	1	
U117		95332031	7406	1	
U118		95340009	74FCT833A-P	1	
U119		95360205	27C256-25-P	1	
U120		95360191	GAL20V8-35Q	1	
U120		00010044	PROGRAMME "SRQ" (EN 20R4)	1	
U121		95343078	26LS32	1	
U122		95343078	26LS32	1	
U123		95360177	74FCT374	1	
U124		95360189	74FCT245	1	
U125		95363035	74F74	1	
U126		95360175	74FCT244	1	
U127		95360175	74FCT244	1	
Z1		94320003	CAVALIER COMATEL	1	
Z10		94480308	SUPPORT CINT 28C LARGE	1	
Z13		97880003	ENTRETOISE EXALIS4 LONG:5 ACCEL	6	
Z14		97612209	VIS V126 CBL M2,5x16	6	
Z15		94480023	VERROUILLAGE SOURIAU 8630-01-060	8	
Z16		94480018	SUPPORT PGA-068-CH3-S-TG ROBINSON	2	
Z17		94480019	SUPPORT PGA-088-CH3-S-TG ROBINSON	1	
Z18		94480318	SUPPORT PLCC 84C SCC84T ANTELEC	1	
Z19		91316870	RAIDISSEUR CARTE 9U	1	
Z2		94480301	SUPPORT CINT 8C	4	
Z3		94480304	SUPPORT CINT 14C COUDE	1	
Z4		94480302	SUPPORT CINT 14C	12	
Z5		94480303	SUPPORT CINT 16C	31	
Z6		94480305	SUPPORT CINT 20C	39	
Z7		94480313	SUPPORT CINT 24C	27	
Z8		94480316	SUPPORT CINT 28C ETROIT	3	
Z9		94480311	SUPPORT CINT 48C	7	

SCHEMATA / CIRCUIT DIAGRAMS

Pap Plus Board Extended Memory 42.355.278.89

Pap Plus Board Extended Memory 32k x 8 ..... 42.355.278.81

Pap Plus Board Extended Memory 128k x 8 ..... 42.355.278.80

Pap Plus Board Extended Memory 42.355.278.89

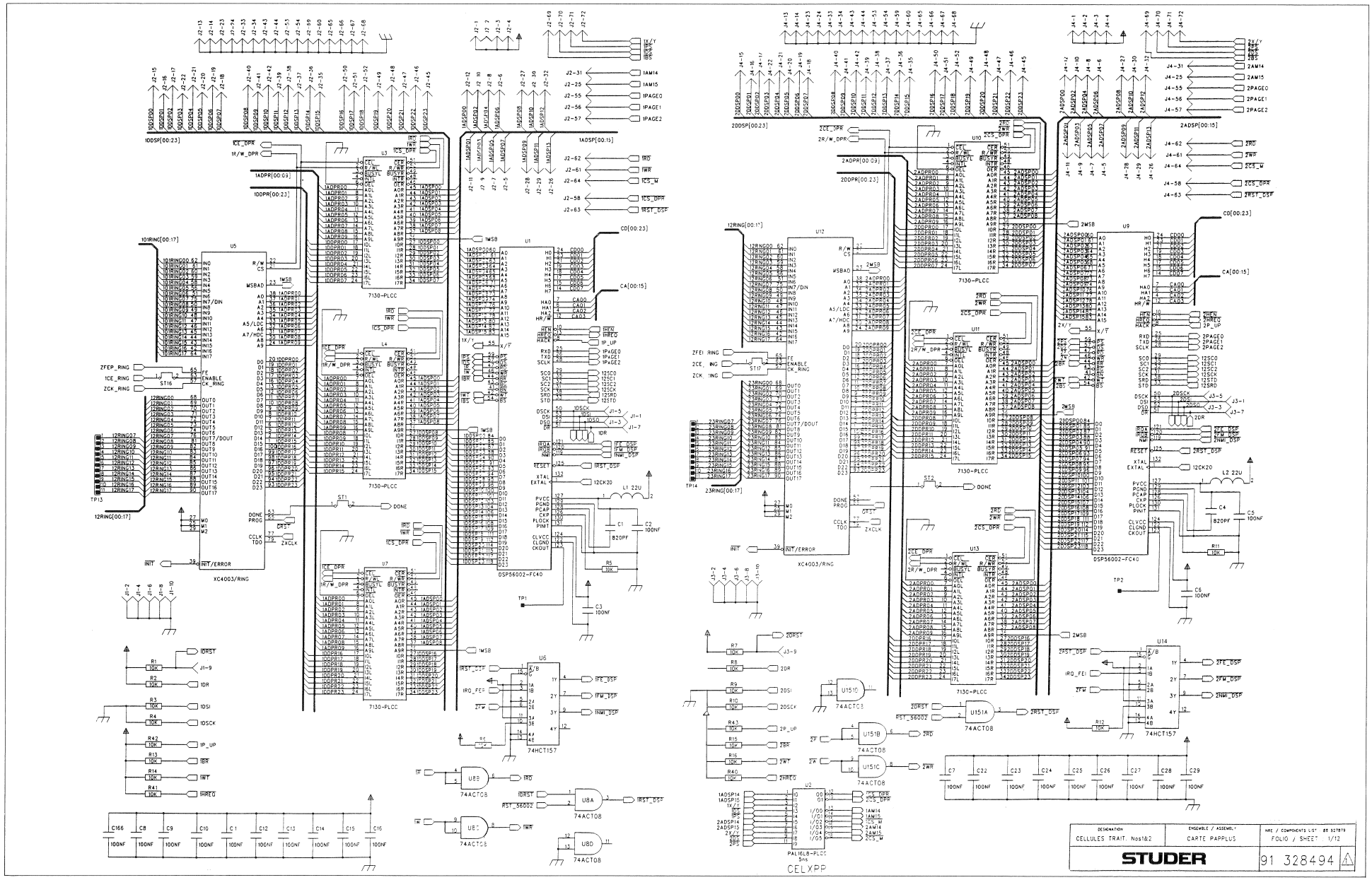

Pap Plus Board Extended Memory 42.355.278.89

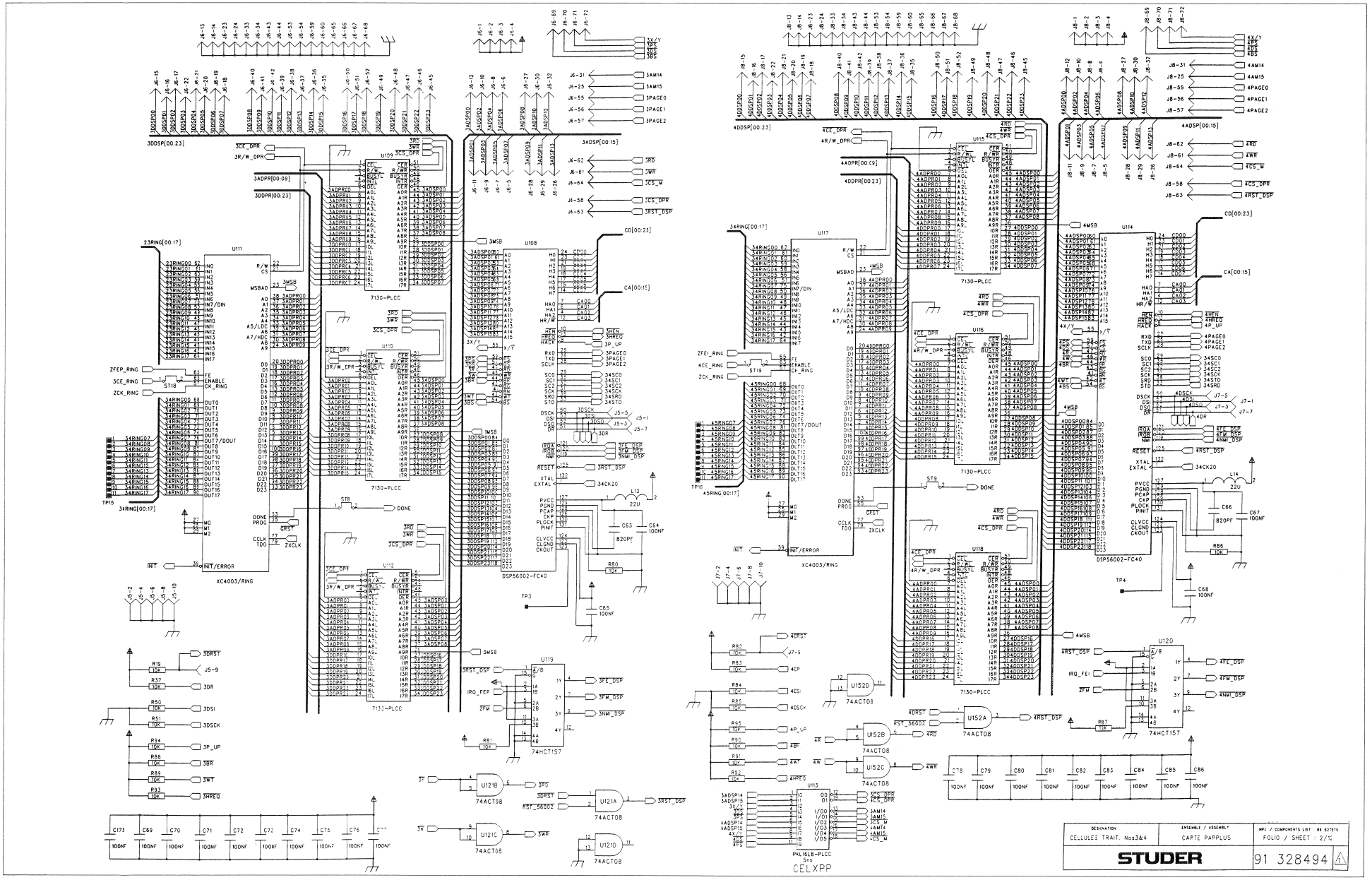

Pap Plus Board Extended Memory 42.355.278.89

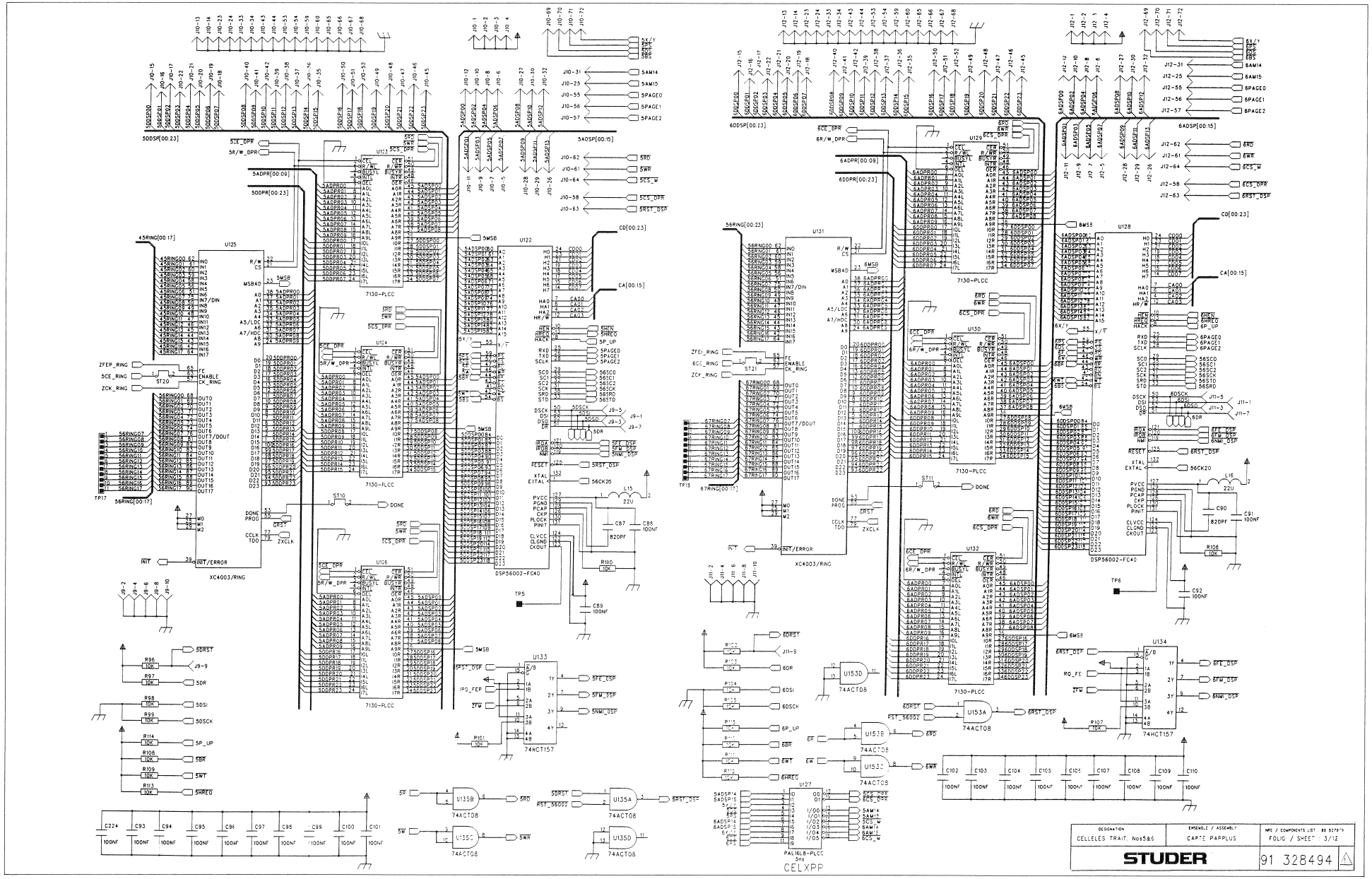

Pap Plus Board Extended Memory 42.355.278.89

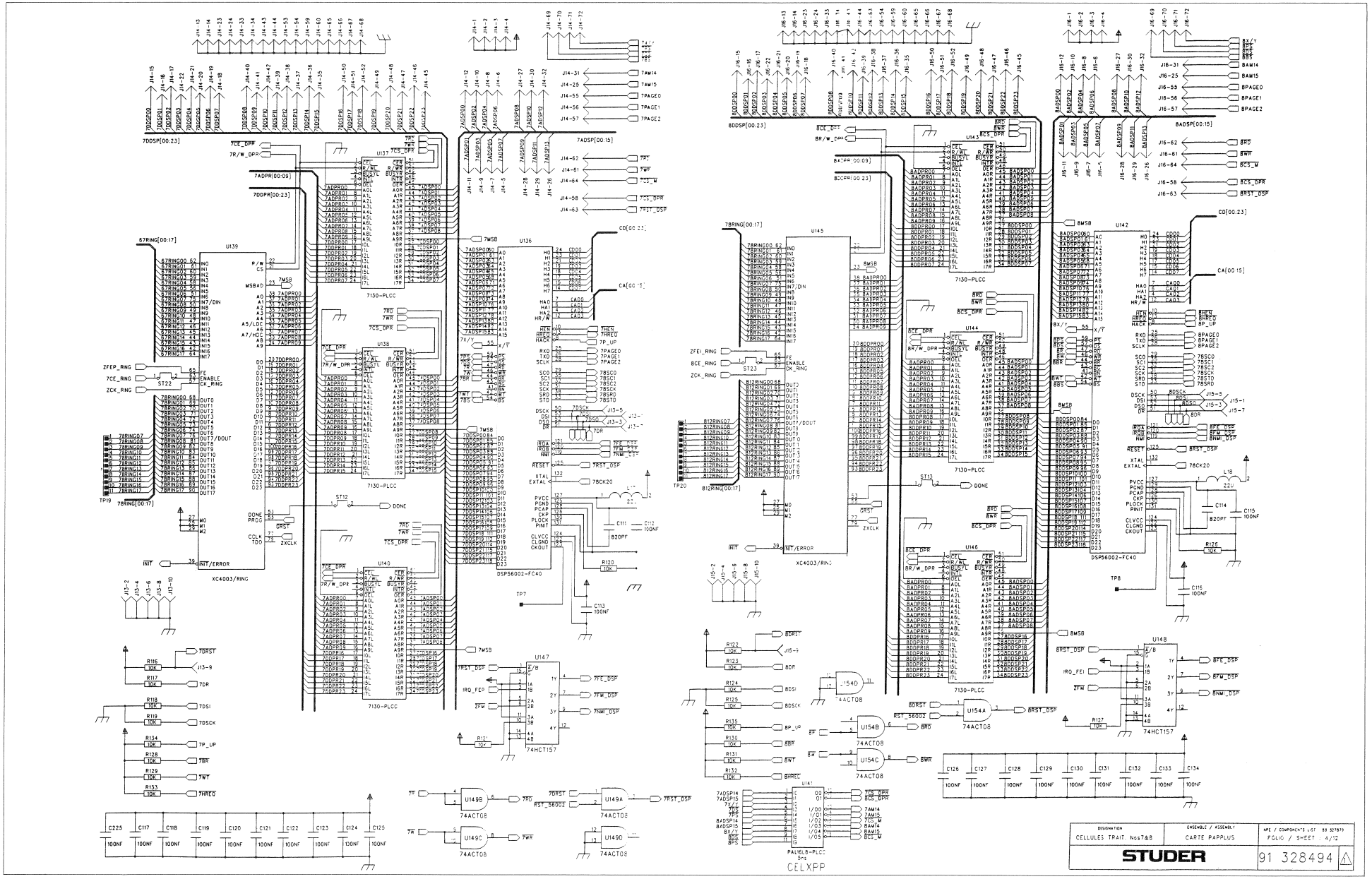

Pap Plus Board Extended Memory 42.355.278.89

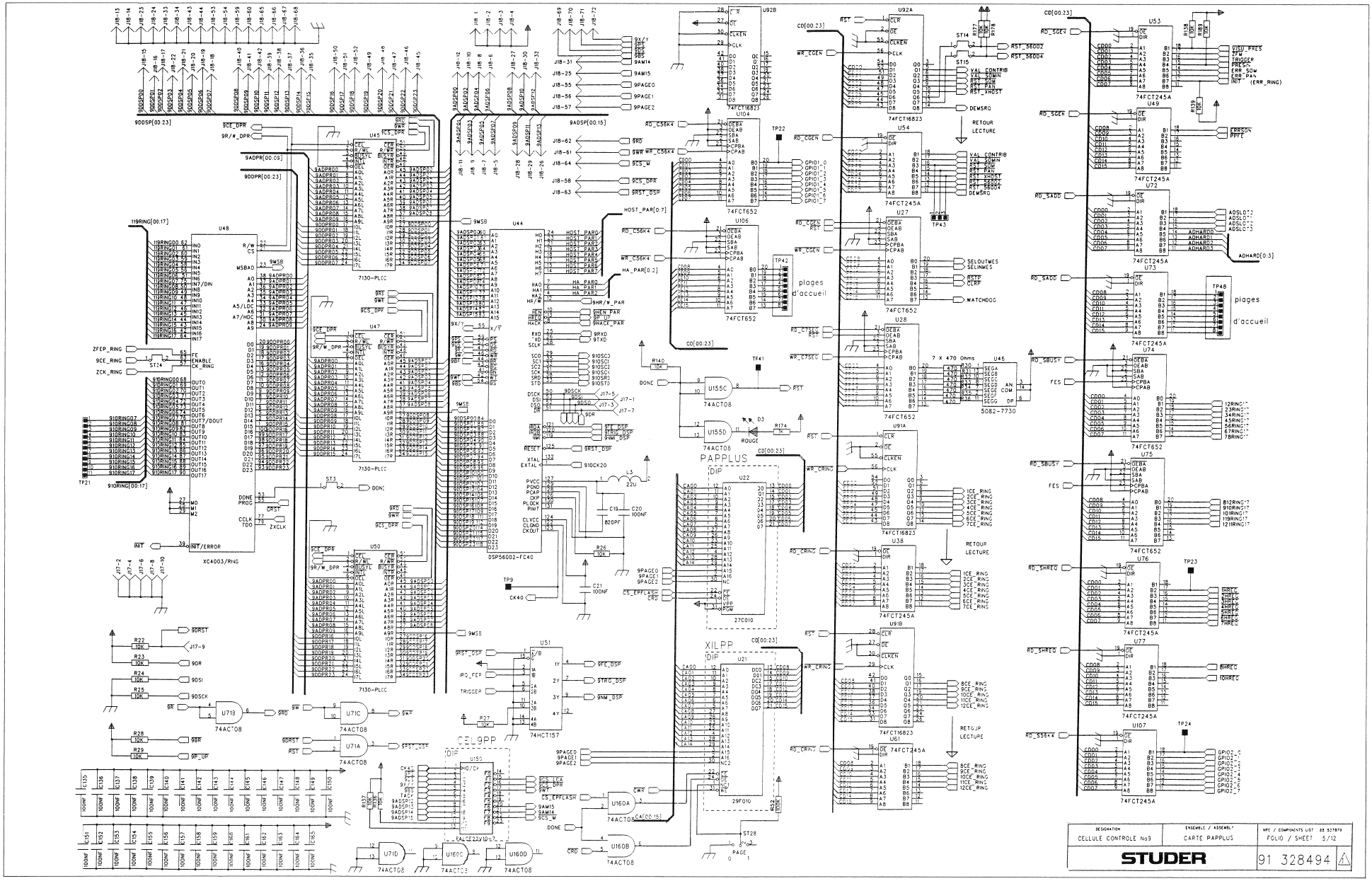

Pap Plus Board Extended Memory 42.355.278.89

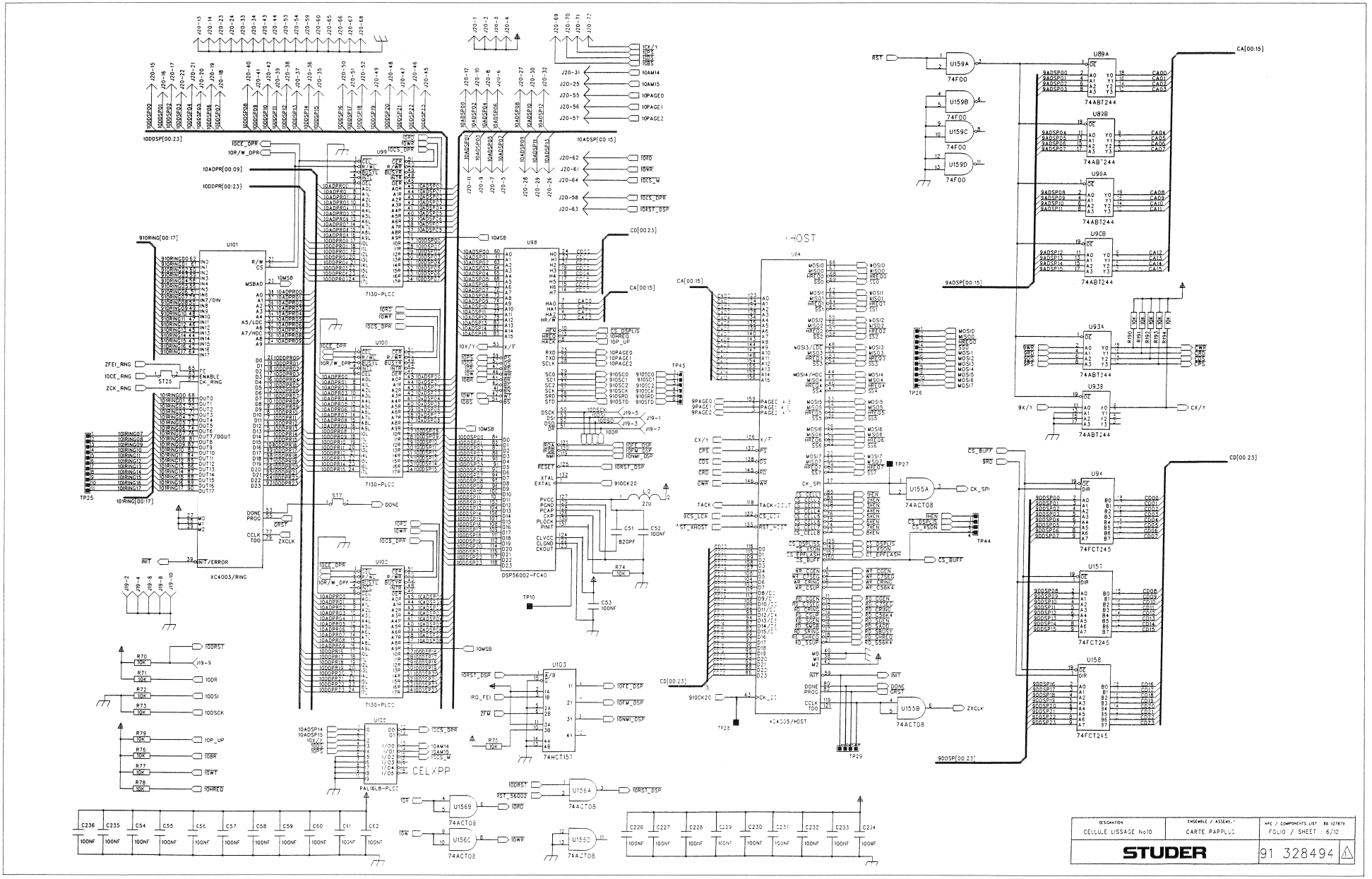

Pap Plus Board Extended Memory 42.355.278.89

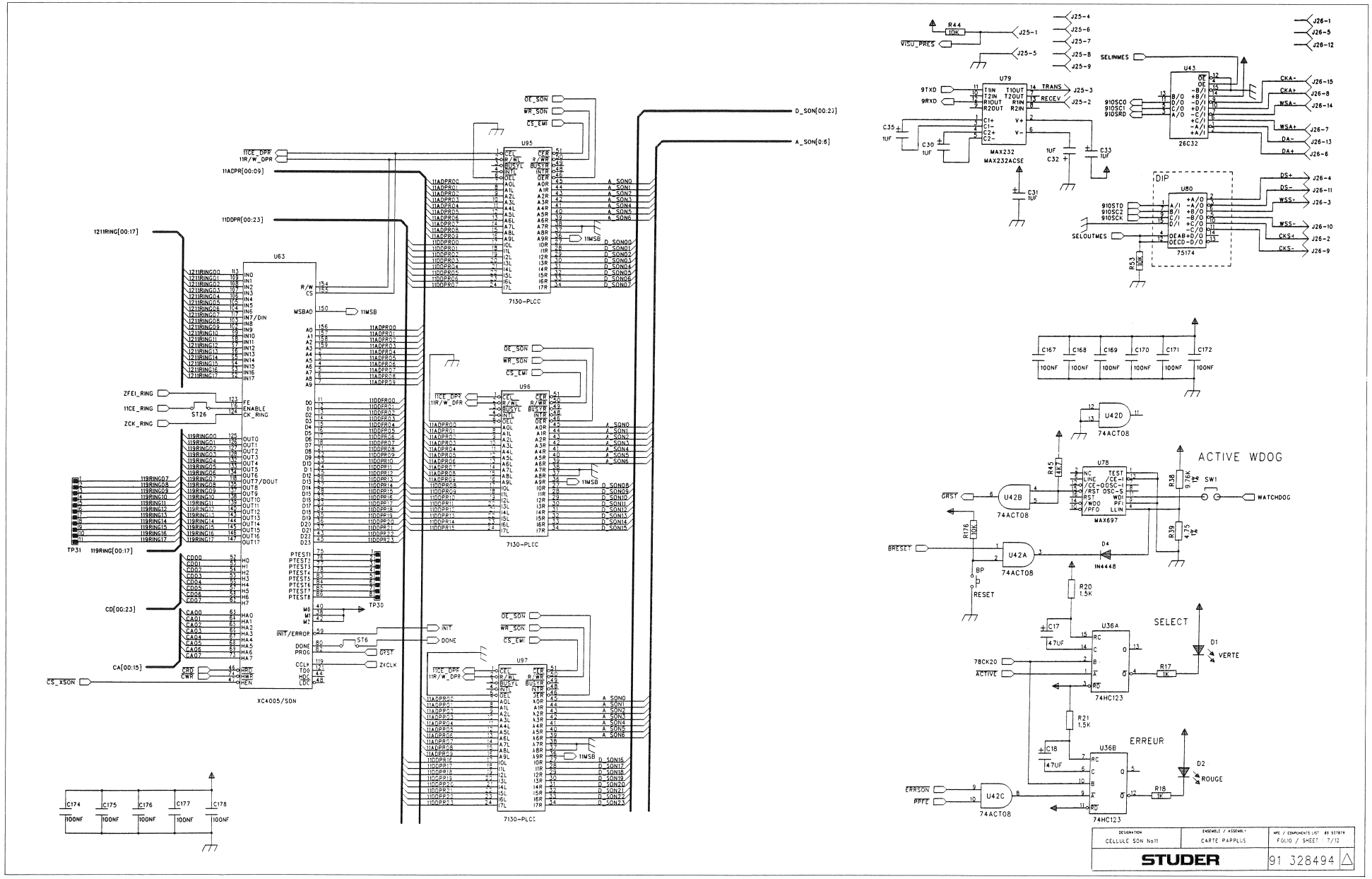

Pap Plus Board Extended Memory 42.355.278.89

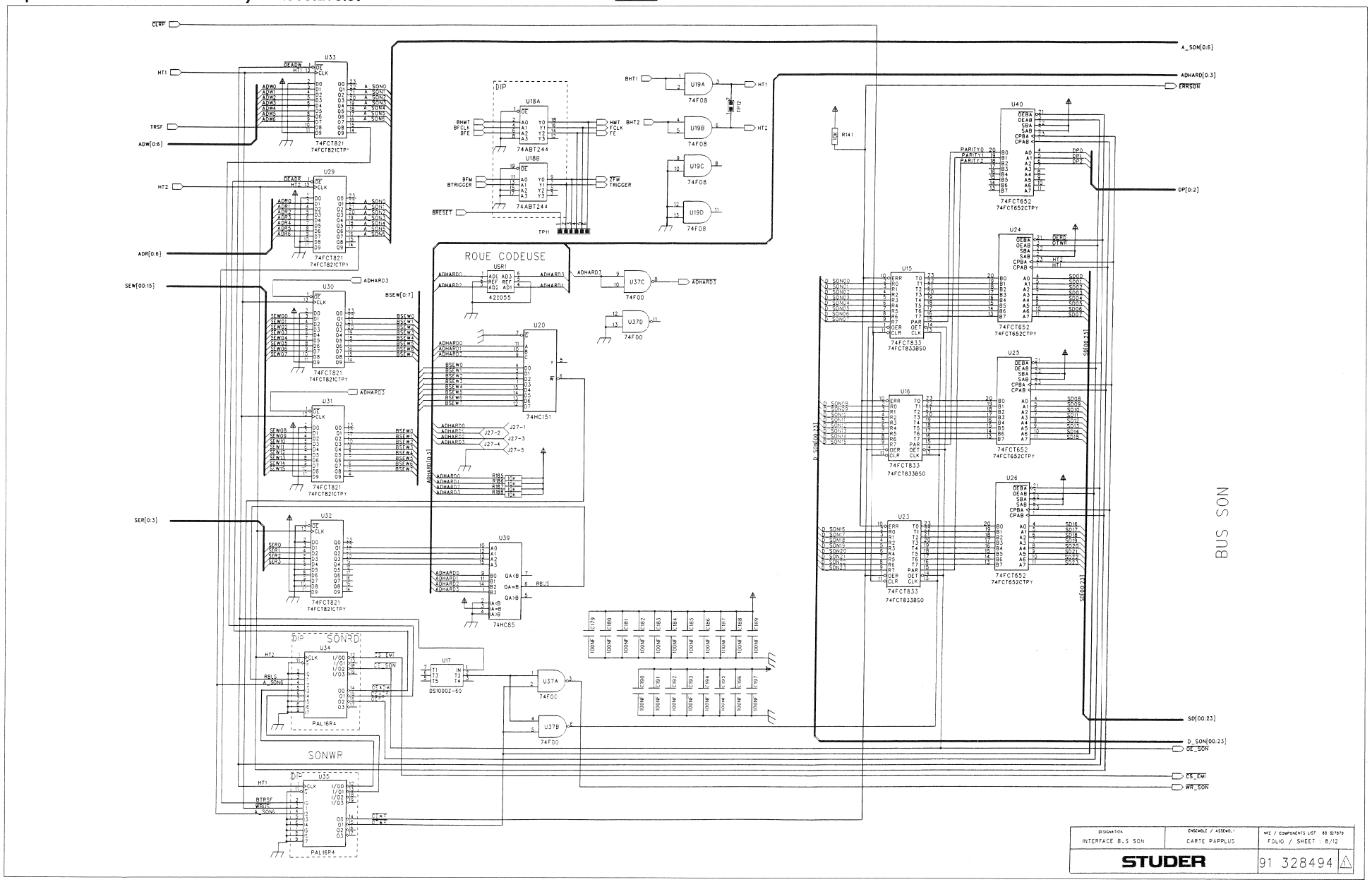

Pap Plus Board Extended Memory 42.355.278.89

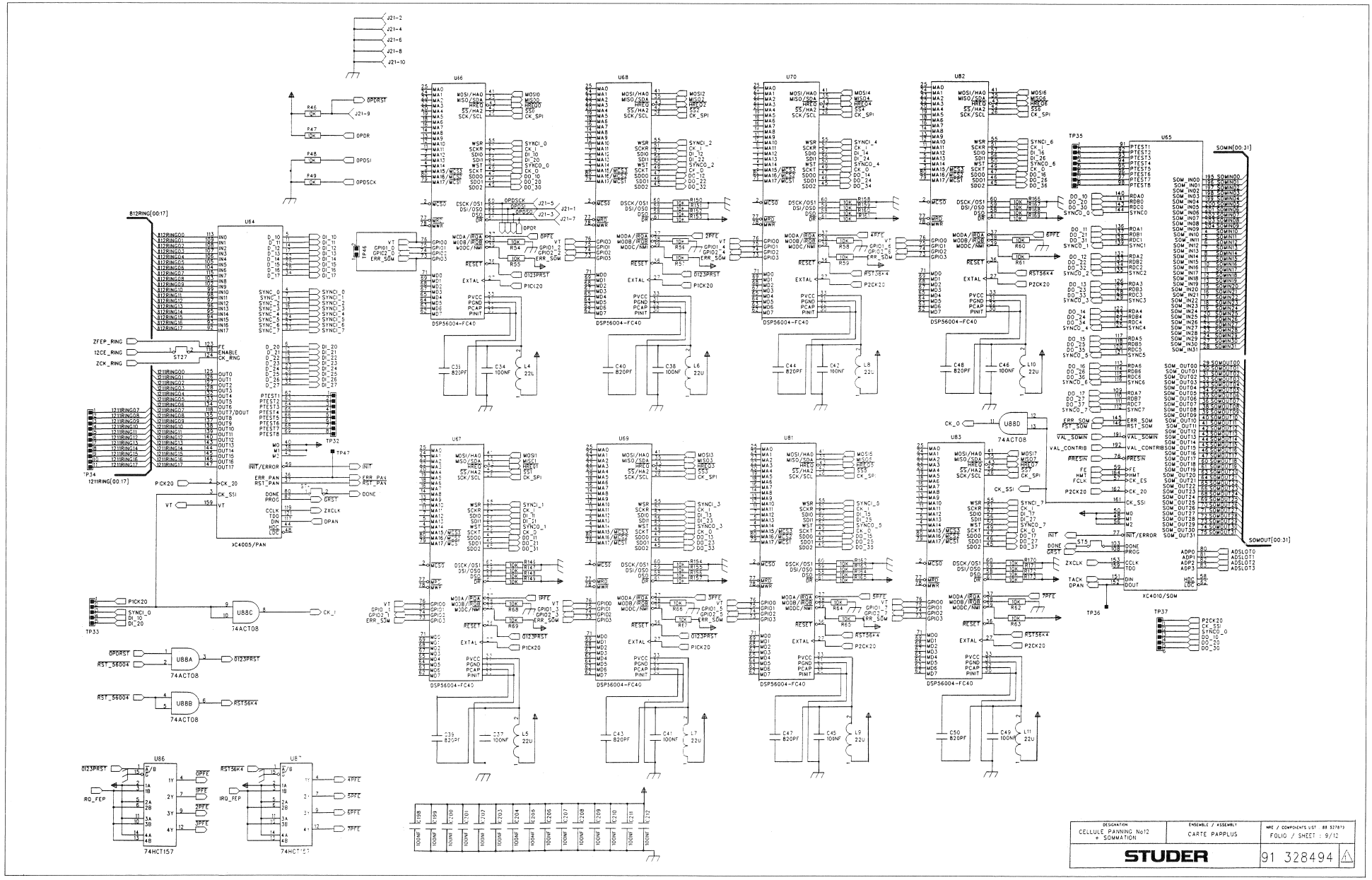

Pap Plus Board Extended Memory 42.355.278.89

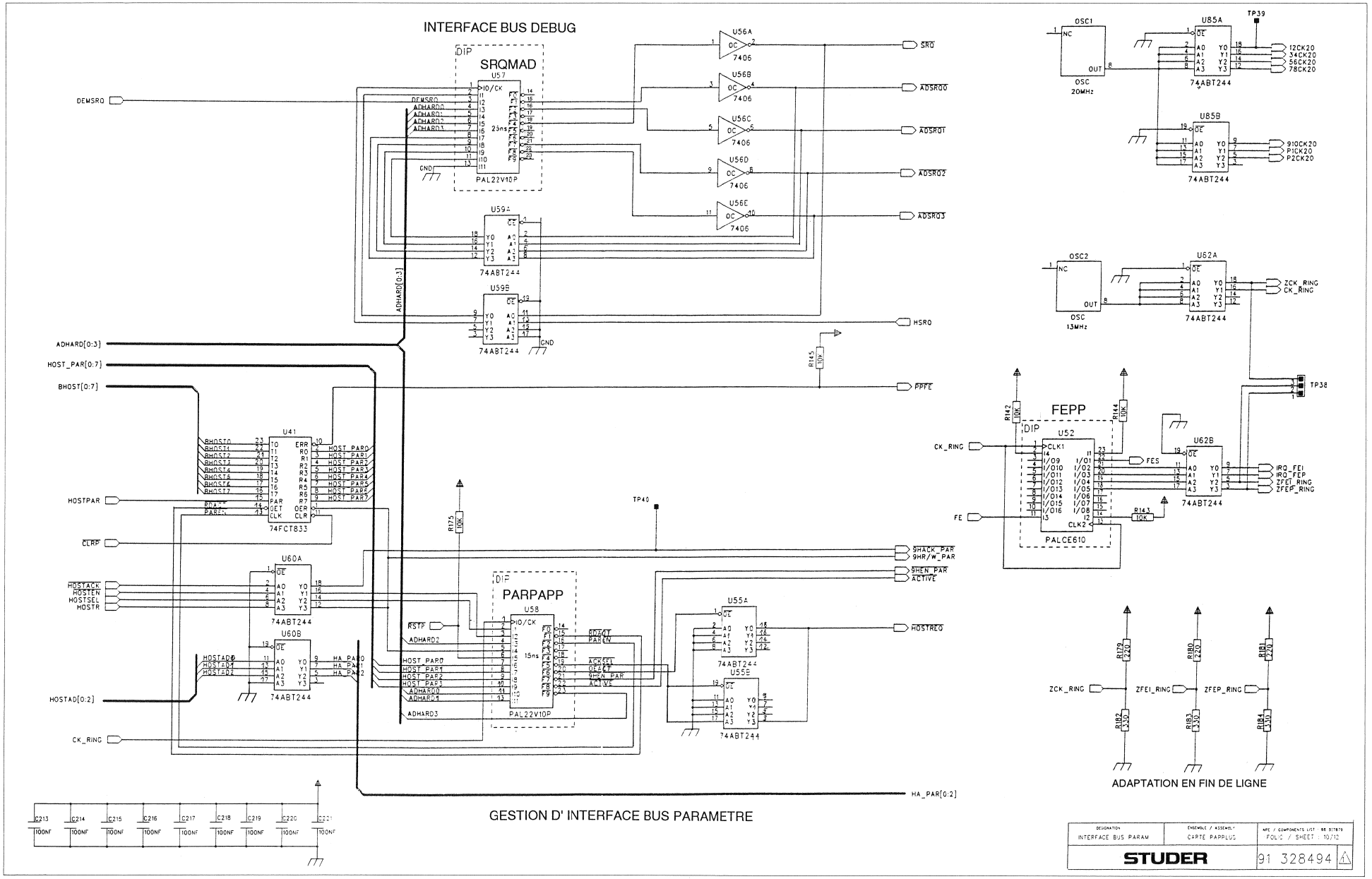

Pap Plus Board Extended Memory 42.355.278.89

CONNECTEUR SUPERIEUR

	RANGEE A	RANGEE B	RANGEE C
J22-A1	SOMIN31	J22-B1	MGND	J22-C1	SOMOUT31
J22-A2	SOMIN30	J22-B2		J22-C2	SOMOUT30
J22-A3	SOMIN29	J22-B3		J22-C3	SOMOUT29
J22-A4	SOMIN28	J22-B4		J22-C4	SOMOUT28
J22-A5	SOMIN27	J22-B5		J22-C5	SOMOUT27
J22-A6	SOMIN26	J22-B6	GND	J22-C6	SOMOUT26
J22-A7	SOMIN25	J22-B7	+5V	J22-C7	SOMOUT25
J22-A8	SOMIN24	J22-B8	ADSLOT3	J22-C8	SOMOUT24
J22-A9	SOMIN23	J22-B9	ADSLOT2	J22-C9	SOMOUT23
J22-A10	SOMIN22	J22-B10	ADSLOT1	J22-C10	SOMOUT22
J22-A11	SOMIN21	J22-B11	ADSLOT0	J22-C11	SOMOUT21
J22-A12	SOMIN20	J22-B12	GND	J22-C12	SOMOUT20
J22-A13	SOMIN19	J22-B13	PRESIN	J22-C13	SOMOUT19
J22-A14	SOMIN18	J22-B14	GND	J22-C14	SOMOUT18
J22-A15	SOMIN17	J22-B15	GND	J22-C15	SOMOUT17
J22-A16	SOMIN16	J22-B16		J22-C16	SOMOUT16
J22-A17	SOMIN15	J22-B17		J22-C17	SOMOUT15
J22-A18	SOMIN14	J22-B18		J22-C18	SOMOUT14
J22-A19	SOMIN13	J22-B19		J22-C19	SOMOUT13
J22-A20	SOMIN12	J22-B20		J22-C20	SOMOUT12
J22-A21	SOMIN11	J22-B21		J22-C21	SOMOUT11
J22-A22	SOMIN10	J22-B22		J22-C22	SOMOUT10
J22-A23	SOMIN09	J22-B23		J22-C23	SOMOUT09
J22-A24	SOMIN08	J22-B24		J22-C24	SOMOUT08
J22-A25	SOMIN07	J22-B25		J22-C25	SOMOUT07
J22-A26	SOMIN06	J22-B26		J22-C26	SOMOUT06
J22-A27	SOMIN05	J22-B27		J22-C27	SOMOUT05
J22-A28	SOMIN04	J22-B28		J22-C28	SOMOUT04
J22-A29	SOMIN03	J22-B29		J22-C29	SOMOUT03
J22-A30	SOMIN02	J22-B30		J22-C30	SOMOUT02
J22-A31	SOMIN01	J22-B31		J22-C31	SOMOUT01
J22-A32	SOMIN00	J22-B32	MGND	J22-C32	SOMOUT00

CONNECTEUR MILIEU

	RANGEE A	RANGEE B	RANGEE C
J23-A1	ADR0	J23-B1	ADR1	J23-C1	ADR2
J23-A2	ADR3	J23-B2	ADR4	J23-C2	ADR5
J23-A3	ADR6	J23-B3	ADW5	J23-C3	ADW6
J23-A4	ADW0	J23-B4		J23-C4	TRSF
J23-A5	ADW1	J23-B5		J23-C5	SEW00
J23-A6	ADW2	J23-B6		J23-C6	SEW01
J23-A7	ADW3	J23-B7		J23-C7	SEW02
J23-A8	ADW4	J23-B8		J23-C8	SEW03
J23-A9	GND	J23-B9		J23-C9	GND
J23-A10		J23-B10		J23-C10	SD00
J23-A11	GND	J23-B11		J23-C11	SD01
J23-A12	SEW12	J23-B12	SEW04	J23-C12	SD02
J23-A13	SEW13	J23-B13	SEW05	J23-C13	SD03
J23-A14	SEW14	J23-B14	SEW06	J23-C14	SD04
J23-A15	GND	J23-B15	SEW07	J23-C15	SD05
J23-A16	SEW15	J23-B16	SEW08	J23-C16	SD06
J23-A17	GND	J23-B17	SEW09	J23-C17	SD07
J23-A18	SER0	J23-B18	SEW10	J23-C18	SD08
J23-A19	GND	J23-B19	SEW11	J23-C19	SD09
J23-A20	SER1	J23-B20	GND	J23-C20	SD10
J23-A21		J23-B21	SER2	J23-C21	SD11
J23-A22		J23-B22	SER3	J23-C22	SD12
J23-A23		J23-B23	GND	J23-C23	SD13
J23-A24		J23-B24	SD21	J23-C24	SD14
J23-A25		J23-B25	SD22	J23-C25	SD15
J23-A26		J23-B26	SD23	J23-C26	SD16
J23-A27	DP0	J23-B27		J23-C27	SD17
J23-A28	DP1	J23-B28		J23-C28	SD18
J23-A29	DP2	J23-B29		J23-C29	SD19
J23-A30		J23-B30		J23-C30	SD20
J23-A31		J23-B31		J23-C31	
J23-A32	+5V	J23-B32	+5V	J23-C32	+5V

CONNECTEUR INFERIEUR

	RANGEE A	RANGEE B	RANGEE C
J24-A1		J24-B1		J24-C1	BHOST0
J24-A2		J24-B2		J24-C2	BHOST1
J24-A3		J24-B3		J24-C3	BHOST2
J24-A4		J24-B4		J24-C4	BHOST3
J24-A5		J24-B5		J24-C5	BHOST4
J24-A6		J24-B6		J24-C6	BHOST5
J24-A7		J24-B7		J24-C7	BHOST6
J24-A8		J24-B8		J24-C8	BHOST7
J24-A9	GND	J24-B9		J24-C9	GND
J24-A10	BFE	J24-B10		J24-C10	
J24-A11	GND	J24-B11		J24-C11	HOSTPAR
J24-A12	BHT2	J24-B12		J24-C12	HOSTAD0
J24-A13		J24-B13		J24-C13	HOSTAD1
J24-A14	BHT1	J24-B14		J24-C14	HOSTAD2
J24-A15	GND	J24-B15		J24-C15	HOSTR
J24-A16	BHMT	J24-B16		J24-C16	$\overline{\text{HOSTACK}}$
J24-A17	GND	J24-B17		J24-C17	$\overline{\text{HOSTEN}}$
J24-A18		J24-B18		J24-C18	HOSTSEL
J24-A19	GND	J24-B19		J24-C19	$\overline{\text{HOSTREQ}}$
J24-A20	BFM	J24-B20	GND	J24-C20	
J24-A21		J24-B21		J24-C21	HSRQ
J24-A22		J24-B22		J24-C22	$\overline{\text{SRQ}}$
J24-A23		J24-B23	GND	J24-C23	
J24-A24	BFCLK	J24-B24		J24-C24	BTRIGGER
J24-A25		J24-B25		J24-C25	
J24-A26	$\overline{\text{BRESET}}$	J24-B26		J24-C26	$\overline{\text{ADSRQ3}}$
J24-A27		J24-B27		J24-C27	$\overline{\text{ADSRQ2}}$
J24-A28		J24-B28		J24-C28	$\overline{\text{ADSRQ1}}$
J24-A29		J24-B29		J24-C29	$\overline{\text{ADSRQ0}}$
J24-A30		J24-B30		J24-C30	
J24-A31	MGND	J24-B31		J24-C31	MGND
J24-A32	+5V	J24-B32	+5V	J24-C32	+5V

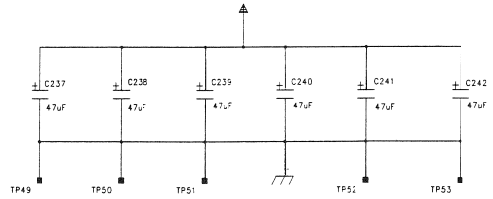

DESIGNATION	ENSEMBLE / ASSEMBLY	NRE / COMPONENTS LIST 88 327879
CONNECTEURS	CARTE PAPPLUS	FOLIO / SHEET 11/12
STUDER	91 328494	

Pap Plus Board Extended Memory 42.355.278.89

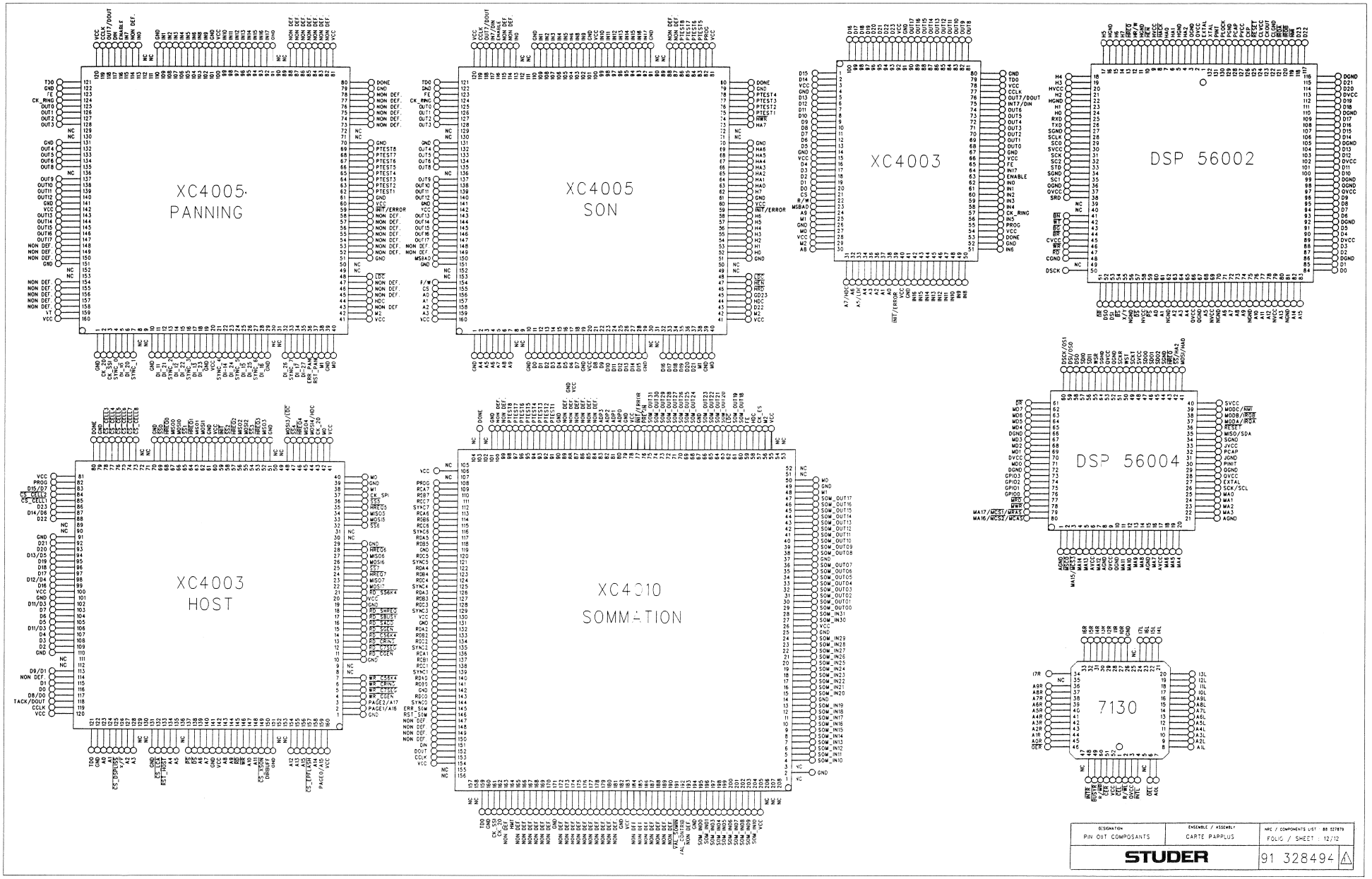

Pap Plus Board Extended Memory 42.355.278.89

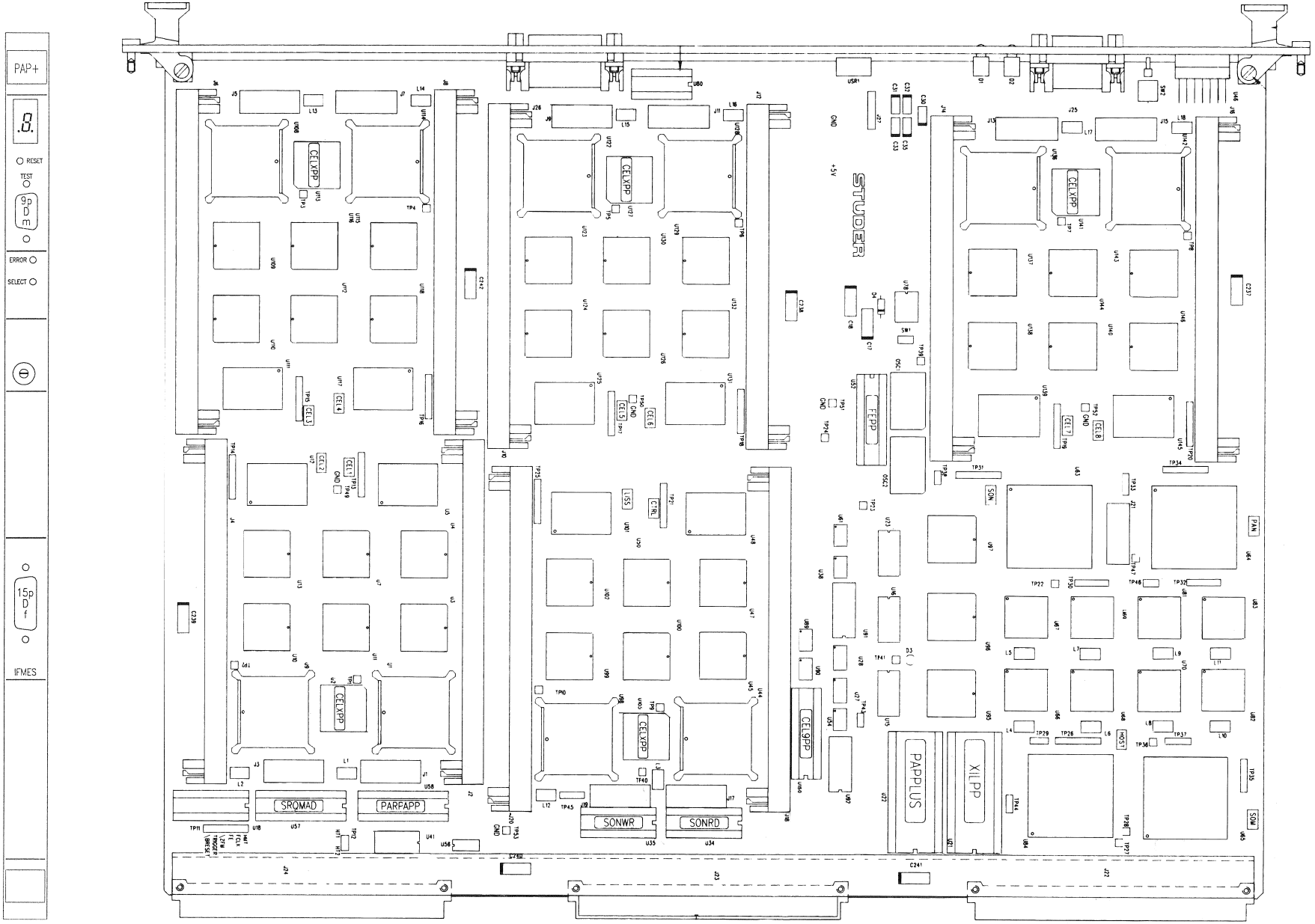

Pap Plus Board Extended Memory 42.355.278.89

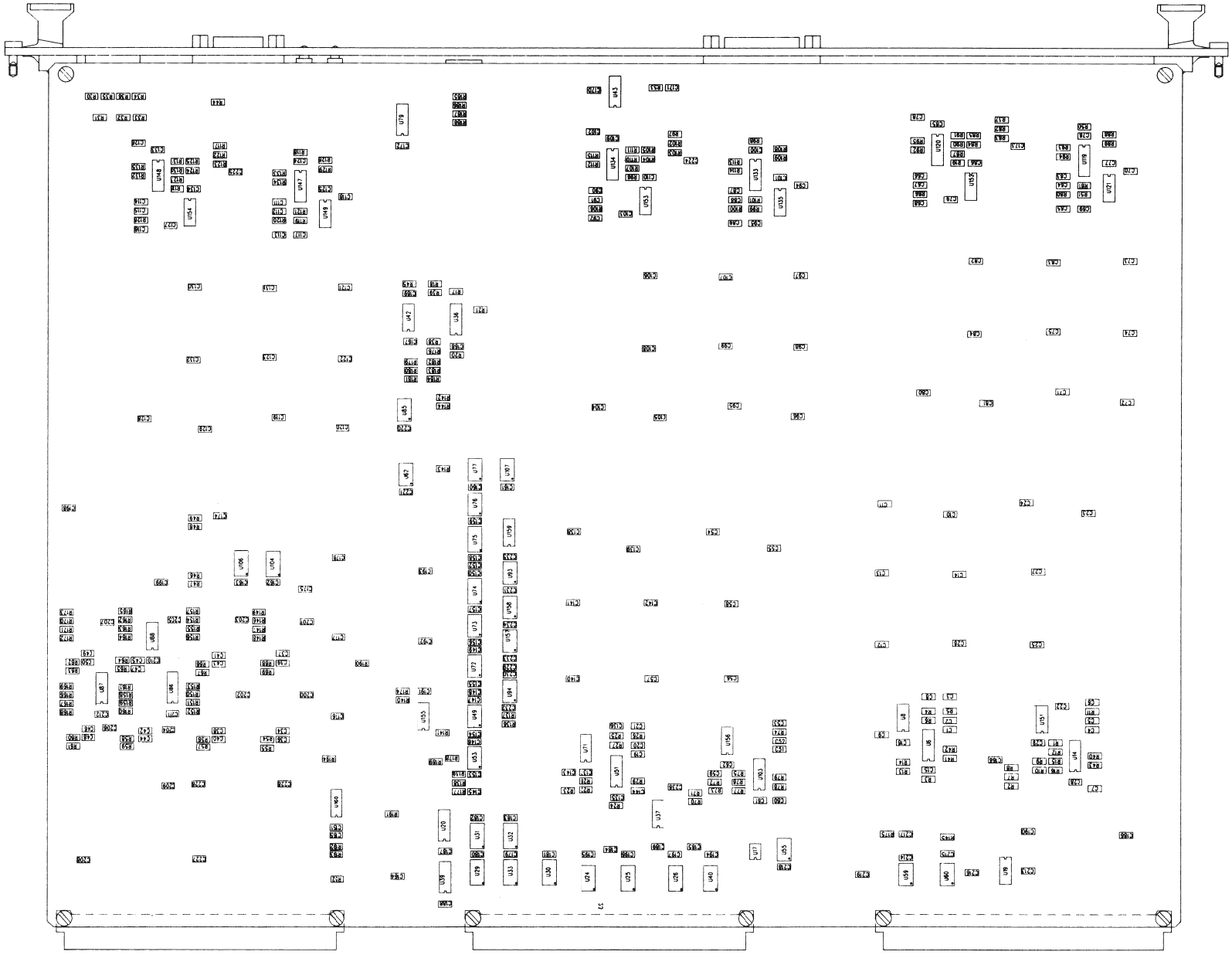

Pap Plus Board Extended Memory 42.355.278.89

MODIF.: IND. Xa=ajout - IND. Xm=modif. ref. et/ou valeur - IND. Xs=suppression

REPERE	IND	COMPOSANT	DESIGNATION	VALEUR	QTE	FABRIQ.	BOITIER
A1		91328494	SCHEMA		1		
A2		91224166	FILM CIRCUIT		1		
A3		30224166	TEST DE CONFORMITE		1		
A4		91224167	FILM DE SERIGRAPHIE		1		
A5		91224168	FILM EPARGNE SOUDURE		1		
A6		91224169	FILM PATE A BRASER		1		
A7		30224169	ECRAN PATE A BRASER		1		
A8		91122597	PLAN DE FABRICATION		1		
A9		30122597	OUTIL DE FABRICATION		1		
A10		91122598	USINAGE FACE AVANT		1		
A11		91224170	FILM SERIGRAPHIE FACE AVANT		1		
A12		91224171	PLAN DE SERIGRAPHIE FACE AVANT		1		
A13		30224171	OUTIL DE SERIGRAPHIE FACE AVANT		1		
A14		91815561	MYLAR ETIQUETTE POIGNEE REPERE D11		1		
A15		91830850	PLAN DE SERIGRAPHIE ETIQ. POIGNEE		1		
A16		30830850	OUTIL DE SERIGRAPHIE POIGNEE		1		
A17		91815505	ETIQUETTE REPERE CONNECTEUR		1		
A18		91316870	RAIDISSEUR		1		
A19		91122599	PLAN D'EQUIPEMENT		1		
A20		91815597	VIS CBL M2,5x14		6		
C1		95500021	CONDENSATEUR	CNC2 820pF 10% 63V	1		0805
C2		95500022	CONDENSATEUR	CNC2 100nF 20% 25V	1		0805
C3		95500022	CONDENSATEUR	CNC2 100nF 20% 25V	1		0805
C4		95500021	CONDENSATEUR	CNC2 820pF 10% 63V	1		0805
C5		95500022	CONDENSATEUR	CNC2 100nF 20% 25V	1		0805
C6		95500022	CONDENSATEUR	CNC2 100nF 20% 25V	1		0805
C7		95500022	CONDENSATEUR	CNC2 100nF 20% 25V	1		0805
C8		95500022	CONDENSATEUR	CNC2 100nF 20% 25V	1		0805
C9		95500022	CONDENSATEUR	CNC2 100nF 20% 25V	1		0805
C10		95500022	CONDENSATEUR	CNC2 100nF 20% 25V	1		0805
C11		95500022	CONDENSATEUR	CNC2 100nF 20% 25V	1		0805
C12		95500022	CONDENSATEUR	CNC2 100nF 20% 25V	1		0805
C13		95500022	CONDENSATEUR	CNC2 100nF 20% 25V	1		0805
C14		95500022	CONDENSATEUR	CNC2 100nF 20% 25V	1		0805
C15		95500022	CONDENSATEUR	CNC2 100nF 20% 25V	1		0805
C16		95500022	CONDENSATEUR	CNC2 100nF 20% 25V	1		0805
C17		95500024	CONDENSATEUR	293D 47µF 10% 10V	1	SPRAGUE	CASE D
C18		95500024	CONDENSATEUR	293D 47µF 10% 10V	1	SPRAGUE	CASE D
C19		95500021	CONDENSATEUR	CNC2 820pF 10% 63V	1		0805
C20		95500022	CONDENSATEUR	CNC2 100nF 20% 25V	1		0805
C21		95500022	CONDENSATEUR	CNC2 100nF 20% 25V	1		0805
C22		95500022	CONDENSATEUR	CNC2 100nF 20% 25V	1		0805
C23		95500022	CONDENSATEUR	CNC2 100nF 20% 25V	1		0805
C24		95500022	CONDENSATEUR	CNC2 100nF 20% 25V	1		0805
C25		95500022	CONDENSATEUR	CNC2 100nF 20% 25V	1		0805
C26		95500022	CONDENSATEUR	CNC2 100nF 20% 25V	1		0805
C27		95500022	CONDENSATEUR	CNC2 100nF 20% 25V	1		0805
C28		95500022	CONDENSATEUR	CNC2 100nF 20% 25V	1		0805
C29		95500022	CONDENSATEUR	CNC2 100nF 20% 25V	1		0805
C30		95500023	CONDENSATEUR	CNC2 1µF 10% 16V	1	SPRAGUE	CASE A
C31		95500023	CONDENSATEUR	CNC2 1µF 10% 16V	1	SPRAGUE	CASE A
C32		95500023	CONDENSATEUR	CNC2 1µF 10% 16V	1	SPRAGUE	CASE A
C33		95500023	CONDENSATEUR	CNC2 1µF 10% 16V	1	SPRAGUE	CASE A
C34		95500022	CONDENSATEUR	CNC2 100nF 20% 25V	1		0805
C35		95500023	CONDENSATEUR	CNC2 1µF 10% 16V	1	SPRAGUE	CASE A
C36		95500021	CONDENSATEUR	CNC2 820pF 10% 63V	1		0805
C37		95500022	CONDENSATEUR	CNC2 100nF 20% 25V	1		0805
C38		95500022	CONDENSATEUR	CNC2 100nF 20% 25V	1		0805
C39		95500021	CONDENSATEUR	CNC2 820pF 10% 63V	1		0805
C40		95500021	CONDENSATEUR	CNC2 820pF 10% 63V	1		0805
C41		95500022	CONDENSATEUR	CNC2 100nF 20% 25V	1		0805
C42		95500022	CONDENSATEUR	CNC2 100nF 20% 25V	1		0805
C43		95500021	CONDENSATEUR	CNC2 820pF 20% 25V	1		0805
C44		95500021	CONDENSATEUR	CNC2 820pF 20% 25V	1		0805
C45		95500022	CONDENSATEUR	CNC2 100nF 20% 25V	1		0805
C46		95500022	CONDENSATEUR	CNC2 100nF 20% 25V	1		0805
C47		95500021	CONDENSATEUR	CNC2 820pF 10% 63V	1		0805
C48		95500021	CONDENSATEUR	CNC2 820pF 10% 63V	1		0805
C49		95500022	CONDENSATEUR	CNC2 100nF 20% 25V	1		0805
C50		95500021	CONDENSATEUR	CNC2 820pF 10% 63V	1		0805
C51		95500021	CONDENSATEUR	CNC2 820pF 10% 63V	1		0805
C52		95500022	CONDENSATEUR	CNC2 100nF 20% 25V	1		0805
C53		95500022	CONDENSATEUR	CNC2 100nF 20% 25V	1		0805
C54		95500022	CONDENSATEUR	CNC2 100nF 20% 25V	1		0805
C55		95500022	CONDENSATEUR	CNC2 100nF 20% 25V	1		0805
C56		95500022	CONDENSATEUR	CNC2 100nF 20% 25V	1		0805
C57		95500022	CONDENSATEUR	CNC2 100nF 20% 25V	1		0805
C58		95500022	CONDENSATEUR	CNC2 100nF 20% 25V	1		0805
C59		95500022	CONDENSATEUR	CNC2 100nF 20% 25V	1		0805
C60		95500022	CONDENSATEUR	CNC2 100nF 20% 25V	1		0805
C61		95500022	CONDENSATEUR	CNC2 100nF 20% 25V	1		0805
C62		95500022	CONDENSATEUR	CNC2 100nF 20% 25V	1		0805
C63		95500021	CONDENSATEUR	CNC2 820pF 10% 63V	1		0805
C64		95500022	CONDENSATEUR	CNC2 100nF 20% 25V	1		0805
C65		95500022	CONDENSATEUR	CNC2 100nF 20% 25V	1		0805
C66		95500021	CONDENSATEUR	CNC2 820pF 10% 63V	1		0805
C67		95500022	CONDENSATEUR	CNC2 100nF 20% 25V	1		0805
C68		95500022	CONDENSATEUR	CNC2 100nF 20% 25V	1		0805
C69		95500022	CONDENSATEUR	CNC2 100nF 20% 25V	1		0805
C70		95500022	CONDENSATEUR	CNC2 100nF 20% 25V	1		0805
C71		95500022	CONDENSATEUR	CNC2 100nF 20% 25V	1		0805
C72		95500022	CONDENSATEUR	CNC2 100nF 20% 25V	1		0805
C73		95500022	CONDENSATEUR	CNC2 100nF 20% 25V	1		0805
C74		95500022	CONDENSATEUR	CNC2 100nF 20% 25V	1		0805
C75		95500022	CONDENSATEUR	CNC2 100nF 20% 25V	1		0805
C76		95500022	CONDENSATEUR	CNC2 100nF 20% 25V	1		0805
C77		95500022	CONDENSATEUR	CNC2 100nF 20% 25V	1		0805
C78		95500022	CONDENSATEUR	CNC2 100nF 20% 25V	1		0805
C79		95500022	CONDENSATEUR	CNC2 100nF 20% 25V	1		0805
C80		95500022	CONDENSATEUR	CNC2 100nF 20% 25V	1		0805
C81		95500022	CONDENSATEUR	CNC2 100nF 20% 25V	1		0805
C82		95500022	CONDENSATEUR	CNC2 100nF 20% 25V	1		0805
C83		95500022	CONDENSATEUR	CNC2 100nF 20% 25V	1		0805
C84		95500022	CONDENSATEUR	CNC2 100nF 20% 25V	1		0805
C85		95500022	CONDENSATEUR	CNC2 100nF 20% 25V	1		0805
C86		95500022	CONDENSATEUR	CNC2 100nF 20% 25V	1		0805
C87		95500021	CONDENSATEUR	CNC2 820pF 10% 63V	1		0805
C88		95500022	CONDENSATEUR	CNC2 100nF 20% 25V	1		0805
C89		95500022	CONDENSATEUR	CNC2 100nF 20% 25V	1		0805
C90		95500021	CONDENSATEUR	CNC2 820pF 10% 63V	1		0805
C91		95500022	CONDENSATEUR	CNC2 100nF 20% 25V	1		0805
C92		95500022	CONDENSATEUR	CNC2 100nF 20% 25V	1		0805
C93		95500022	CONDENSATEUR	CNC2 100nF 20% 25V	1		0805
C94		95500022	CONDENSATEUR	CNC2 100nF 20% 25V	1		0805
C95		95500022	CONDENSATEUR	CNC2 100nF 20% 25V	1		0805
C96		95500022	CONDENSATEUR	CNC2 100nF 20% 25V	1		0805
C97		95500022	CONDENSATEUR	CNC2 100nF 20% 25V	1		0805
C98		95500022	CONDENSATEUR	CNC2 100nF 20% 25V	1		0805
C99		95500022	CONDENSATEUR	CNC2 100nF 20% 25V	1		0805
C100		95500022	CONDENSATEUR	CNC2 100nF 20% 25V	1		0805
C101		95500022	CONDENSATEUR	CNC2 100nF 20% 25V	1		0805
C102		95500022	CONDENSATEUR	CNC2 100nF 20% 25V	1		0805
C103		95500022	CONDENSATEUR	CNC2 100nF 20% 25V	1		0805
C104		95500022	CONDENSATEUR	CNC2 100nF 20% 25V	1		0805
C105		95500022	CONDENSATEUR	CNC2 100nF 20% 25V	1		0805
C106		95500022	CONDENSATEUR	CNC2 100nF 20% 25V	1		0805
C107		95500022	CONDENSATEUR	CNC2 100nF 20% 25V	1		0805
C108		95500022	CONDENSATEUR	CNC2 100nF 20% 25V	1		0805
C109		95500022	CONDENSATEUR	CNC2 100nF 20% 25V	1		0805
C110		95500022	CONDENSATEUR	CNC2 100nF 20% 25V	1		0805
C111		95500021	CONDENSATEUR	CNC2 820pF 10% 63V	1		0805
C112		95500022	CONDENSATEUR	CNC2 100nF 20% 25V	1		0805
C113		95500022	CONDENSATEUR	CNC2 100nF 20% 25V	1		0805
C114		95500021	CONDENSATEUR	CNC2 820pF 10% 63V	1		0805
C115		95500022	CONDENSATEUR	CNC2 100nF 20% 25V	1		0805
C116		95500022	CONDENSATEUR	CNC2 100nF 20% 25V	1		0805
C117		95500022	CONDENSATEUR	CNC2 100nF 20% 25V	1		0805
C118		95500022	CONDENSATEUR	CNC2 100nF 20% 25V	1		0805
C119		95500022	CONDENSATEUR	CNC2 100nF 20% 25V	1		0805
C120		95500022	CONDENSATEUR	CNC2 100nF 20% 25V	1		0805
C121		95500022	CONDENSATEUR	CNC2 100nF 20% 25V	1		0805
C122		95500022	CONDENSATEUR	CNC2 100nF 20% 25V	1		0805
C123		95500022	CONDENSATEUR	CNC2 100nF 20% 25V	1		0805
C124		95500022	CONDENSATEUR	CNC2 100nF 20% 25V	1		0805
C125		95500022	CONDENSATEUR	CNC2 100nF 20% 25V	1		0805
C126		95500022	CONDENSATEUR	CNC2 100nF 20% 25V	1		0805
C127		95500022	CONDENSATEUR	CNC2 100nF 20% 25V	1		0805
C128		95500022	CONDENSATEUR	CNC2 100nF 20% 25V	1		0805
C129		95500022	CONDENSATEUR	CNC2 100nF 20% 25V	1		0805
C130		95500022	CONDENSATEUR	CNC2 100nF 20% 25V	1		0805
C131		95500022	CONDENSATEUR	CNC2 100nF 20% 25V	1		0805
C132		95500022	CONDENSATEUR	CNC2 100nF 20% 25V	1		0805
C133		95500022	CONDENSATEUR	CNC2 100nF 20% 25V	1		0805
C134		95500022	CONDENSATEUR	CNC2 100nF 20% 25V	1		0805
C135		95500022	CONDENSATEUR	CNC2 100nF 20% 25V	1		0805
C136		95500022	CONDENSATEUR	CNC2 100nF 20% 25V	1		0805
C137		95500022	CONDENSATEUR	CNC2 100nF 20% 25V	1		0805
C138		95500022	CONDENSATEUR	CNC2 100nF 20% 25V	1		0805
C139		95500022	CONDENSATEUR	CNC2 100nF 20% 25V	1		0805
C140		95500022	CONDENSATEUR	CNC2 100nF 20% 25V	1		0805
C141		95500022	CONDENSATEUR	CNC2 100nF 20% 25V	1		0805
C142		95500022	CONDENSATEUR	CNC2 100nF 20% 25V	1		0805
C143		95500022	CONDENSATEUR	CNC2 100nF 20% 25V	1		0805
C144		95500022	CONDENSATEUR	CNC2 100nF 20% 25V	1		0805
C145		95500022	CONDENSATEUR	CNC2 100nF 20% 25V	1		0805
C146		95500022	CONDENSATEUR	CNC2 100nF 20% 25V	1		0805
C147		95500022	CONDENSATEUR	CNC2 100nF 20% 25V	1		0805
C148		95500022	CONDENSATEUR	CNC2 100nF 20% 25V	1		0805
C149		95500022	CONDENSATEUR	CNC2 100nF 20% 25V	1		0805
C150		95500022	CONDENSATEUR	CNC2 100nF 20% 25V	1		0805
C151		95500022	CONDENSATEUR	CNC2 100nF 20% 25V	1		0805
C152		95500022	CONDENSATEUR	CNC2 100nF 20% 25V	1		0805

Pap Plus Board Extended Memory 42.355.278.89

REPERE	IND	COMPOSANT	DESIGNATION	VALEUR	QTE	FABRIQ.	BOITIER
C153		95500022	CONDENSATEUR	CNC2 100nF 20% 25V	1		0805
C154		95500022	CONDENSATEUR	CNC2 100nF 20% 25V	1		0805
C155		95500022	CONDENSATEUR	CNC2 100nF 20% 25V	1		0805
C156		95500022	CONDENSATEUR	CNC2 100nF 20% 25V	1		0805
C157		95500022	CONDENSATEUR	CNC2 100nF 20% 25V	1		0805
C158		95500022	CONDENSATEUR	CNC2 100nF 20% 25V	1		0805
C159		95500022	CONDENSATEUR	CNC2 100nF 20% 25V	1		0805
C160		95500022	CONDENSATEUR	CNC2 100nF 20% 25V	1		0805
C161		95500022	CONDENSATEUR	CNC2 100nF 20% 25V	1		0805
C162		95500022	CONDENSATEUR	CNC2 100nF 20% 25V	1		0805
C163		95500022	CONDENSATEUR	CNC2 100nF 20% 25V	1		0805
C164		95500022	CONDENSATEUR	CNC2 100nF 20% 25V	1		0805
C165		95500022	CONDENSATEUR	CNC2 100nF 20% 25V	1		0805
C166		95500022	CONDENSATEUR	CNC2 100nF 20% 25V	1		0805
C167		95500022	CONDENSATEUR	CNC2 100nF 20% 25V	1		0805
C168		95500022	CONDENSATEUR	CNC2 100nF 20% 25V	1		0805
C169		95500022	CONDENSATEUR	CNC2 100nF 20% 25V	1		0805
C170		95500022	CONDENSATEUR	CNC2 100nF 20% 25V	1		0805
C171		95500022	CONDENSATEUR	CNC2 100nF 20% 25V	1		0805
C172		95500022	CONDENSATEUR	CNC2 100nF 20% 25V	1		0805
C173		95500022	CONDENSATEUR	CNC2 100nF 20% 25V	1		0805
C174		95500022	CONDENSATEUR	CNC2 100nF 20% 25V	1		0805
C175		95500022	CONDENSATEUR	CNC2 100nF 20% 25V	1		0805
C176		95500022	CONDENSATEUR	CNC2 100nF 20% 25V	1		0805
C177		95500022	CONDENSATEUR	CNC2 100nF 20% 25V	1		0805
C178		95500022	CONDENSATEUR	CNC2 100nF 20% 25V	1		0805
C179		95500022	CONDENSATEUR	CNC2 100nF 20% 25V	1		0805
C180		95500022	CONDENSATEUR	CNC2 100nF 20% 25V	1		0805
C181		95500022	CONDENSATEUR	CNC2 100nF 20% 25V	1		0805
C182		95500022	CONDENSATEUR	CNC2 100nF 20% 25V	1		0805
C183		95500022	CONDENSATEUR	CNC2 100nF 20% 25V	1		0805
C184		95500022	CONDENSATEUR	CNC2 100nF 20% 25V	1		0805
C185		95500022	CONDENSATEUR	CNC2 100nF 20% 25V	1		0805
C186		95500022	CONDENSATEUR	CNC2 100nF 20% 25V	1		0805
C187		95500022	CONDENSATEUR	CNC2 100nF 20% 25V	1		0805
C188		95500022	CONDENSATEUR	CNC2 100nF 20% 25V	1		0805
C189		95500022	CONDENSATEUR	CNC2 100nF 20% 25V	1		0805
C190		95500022	CONDENSATEUR	CNC2 100nF 20% 25V	1		0805
C191		95500022	CONDENSATEUR	CNC2 100nF 20% 25V	1		0805
C192		95500022	CONDENSATEUR	CNC2 100nF 20% 25V	1		0805
C193		95500022	CONDENSATEUR	CNC2 100nF 20% 25V	1		0805
C194		95500022	CONDENSATEUR	CNC2 100nF 20% 25V	1		0805
C195		95500022	CONDENSATEUR	CNC2 100nF 20% 25V	1		0805
C196		95500022	CONDENSATEUR	CNC2 100nF 20% 25V	1		0805
C197		95500022	CONDENSATEUR	CNC2 100nF 20% 25V	1		0805
C198		95500022	CONDENSATEUR	CNC2 100nF 20% 25V	1		0805
C199		95500022	CONDENSATEUR	CNC2 100nF 20% 25V	1		0805
C200		95500022	CONDENSATEUR	CNC2 100nF 20% 25V	1		0805
C201		95500022	CONDENSATEUR	CNC2 100nF 20% 25V	1		0805
C202		95500022	CONDENSATEUR	CNC2 100nF 20% 25V	1		0805
C203		95500022	CONDENSATEUR	CNC2 100nF 20% 25V	1		0805
C204		95500022	CONDENSATEUR	CNC2 100nF 20% 25V	1		0805
C205		95500022	CONDENSATEUR	CNC2 100nF 20% 25V	1		0805
C206		95500022	CONDENSATEUR	CNC2 100nF 20% 25V	1		0805
C207		95500022	CONDENSATEUR	CNC2 100nF 20% 25V	1		0805
C208		95500022	CONDENSATEUR	CNC2 100nF 20% 25V	1		0805
C209		95500022	CONDENSATEUR	CNC2 100nF 20% 25V	1		0805
C210		95500022	CONDENSATEUR	CNC2 100nF 20% 25V	1		0805
C211		95500022	CONDENSATEUR	CNC2 100nF 20% 25V	1		0805
C212		95500022	CONDENSATEUR	CNC2 100nF 20% 25V	1		0805
C213		95500022	CONDENSATEUR	CNC2 100nF 20% 25V	1		0805
C214		95500022	CONDENSATEUR	CNC2 100nF 20% 25V	1		0805
C215		95500022	CONDENSATEUR	CNC2 100nF 20% 25V	1		0805
C216		95500022	CONDENSATEUR	CNC2 100nF 20% 25V	1		0805
C217		95500022	CONDENSATEUR	CNC2 100nF 20% 25V	1		0805
C218		95500022	CONDENSATEUR	CNC2 100nF 20% 25V	1		0805
C219		95500022	CONDENSATEUR	CNC2 100nF 20% 25V	1		0805
C220		95500022	CONDENSATEUR	CNC2 100nF 20% 25V	1		0805
C221		95500022	CONDENSATEUR	CNC2 100nF 20% 25V	1		0805
C224		95500022	CONDENSATEUR	CNC2 100nF 20% 25V	1		0805
C225		95500022	CONDENSATEUR	CNC2 100nF 20% 25V	1		0805
C226		95500022	CONDENSATEUR	CNC2 100nF 20% 25V	1		0805
C227		95500022	CONDENSATEUR	CNC2 100nF 20% 25V	1		0805
C228		95500022	CONDENSATEUR	CNC2 100nF 20% 25V	1		0805
C229		95500022	CONDENSATEUR	CNC2 100nF 20% 25V	1		0805
C230		95500022	CONDENSATEUR	CNC2 100nF 20% 25V	1		0805
C231		95500022	CONDENSATEUR	CNC2 100nF 20% 25V	1		0805
C232		95500022	CONDENSATEUR	CNC2 100nF 20% 25V	1		0805
C233		95500022	CONDENSATEUR	CNC2 100nF 20% 25V	1		0805
C234		95500022	CONDENSATEUR	CNC2 100nF 20% 25V	1		0805
C235		95500022	CONDENSATEUR	CNC2 100nF 20% 25V	1		0805
C236		95500022	CONDENSATEUR	CNC2 100nF 20% 25V	1		0805
C237	1a	95500024	CONDENSATEUR	293D 47µF 10% 10V	1	SPRAGUE	CASE D
C238	1a	95500024	CONDENSATEUR	293D 47µF 10% 10V	1	SPRAGUE	CASE D
C239	1a	95500024	CONDENSATEUR	293D 47µF 10% 10V	1	SPRAGUE	CASE D
C240	1a	95500024	CONDENSATEUR	293D 47µF 10% 10V	1	SPRAGUE	CASE D
C241	1a	95500024	CONDENSATEUR	293D 47µF 10% 10V	1	SPRAGUE	CASE D
C242	1a	95500024	CONDENSATEUR	293D 47µF 10% 10V	1	SPRAGUE	CASE D

REPERE	IND	COMPOSANT	DESIGNATION	VALEUR	QTE	FABRIQ.	BOITIER
D1		95163002	LED VERT	HLMP-1790	1	HEWLETT	
D2		95163000	LED ROUGE	HLMP-1700	1	HEWLETT	
D3		95163002	LED DIA:1,8 ROUGE	LTL709R (223945)	1	ORBITEC	
D4		95222854	DIODE S104	1N4448	1		
J1	3s	94426068	CONNECT HE10 DROIT	PROFIL REDUIT	0		
J2	1m	94420266	CONNECT SIMM 72	87 734	1	ASCOME	
J3	3s	94426068	CONNECT HE10 DROIT	PROFIL REDUIT	0		
J4	1m	94420266	CONNECT SIMM 72	87 734	1	ASCOME	
J5	3s	94426068	CONNECT HE10 DROIT	PROFIL REDUIT	0		
J6	1m	94420266	CONNECT SIMM 72	87 734	1	ASCOME	
J7	3s	94426068	CONNECT HE10 DROIT	PROFIL REDUIT	0		
J8	1m	94420266	CONNECT SIMM 72	87 734	1	ASCOME	
J9	3s	94426068	CONNECT HE10 DROIT	PROFIL REDUIT	0		
J10	1m	94420266	CONNECT SIMM 72	87 734	1	ASCOME	
J11	3s	94426068	CONNECT HE10 DROIT	PROFIL REDUIT	0		
J12	1m	94420266	CONNECT SIMM 72	87 734	1	ASCOME	
J13	3s	94426068	CONNECT HE10 DROIT	PROFIL REDUIT	0		
J14	1m	94420266	CONNECT SIMM 72	87 734	1	ASCOME	
J15	3s	94426068	CONNECT HE10 DROIT	PROFIL REDUIT	0		
J16	1m	94420266	CONNECT SIMM 72	87 734	1	ASCOME	
J17	3s	94426068	CONNECT HE10 DROIT	PROFIL REDUIT	0		
J18	1m	94420266	CONNECT SIMM 72	87 734	1	ASCOME	
J19	3s	94426068	CONNECT HE10 DROIT	PROFIL REDUIT	0		
J20	1m	94420266	CONNECT SIMM 72	87 734	1	ASCOME	
J21	3s	94426068	CONNECT HE10 DROIT	PROFIL REDUIT	0		
J22		94410049	CONNECT DIN 96Pts	COUDE MALE	1		
J23		94410049	CONNECT DIN 96Pts	COUDE MALE	1		
J24		94410049	CONNECT DIN 96Pts	COUDE MALE	1		
J25		94480021	CONNECT SUBD 9Pts M	ZEDE 111979-011	1	ITT	
J26		94480022	CONNECT SUBD 15Pts F	ZEDA 111978-111	1	ITT	
J27		94450009	REPART MINI WRAP	385-0358-1-40-40-0	.125	COMATEL	
L1		95400012	SELF 22µH 10%	CM453232-220K	1	SECRE	1812
L2		95400012	SELF 22µH 10%	CM453232-220K	1	SECRE	1812
L3		95400012	SELF 22µH 10%	CM453232-220K	1	SECRE	1812
L4		95400012	SELF 22µH 10%	CM453232-220K	1	SECRE	1812
L5		95400012	SELF 22µH 10%	CM453232-220K	1	SECRE	1812
L6		95400012	SELF 22µH 10%	CM453232-220K	1	SECRE	1812
L7		95400012	SELF 22µH 10%	CM453232-220K	1	SECRE	1812
L8		95400012	SELF 22µH 10%	CM453232-220K	1	SECRE	1812
L9		95400012	SELF 22µH 10%	CM453232-220K	1	SECRE	1812
L10		95400012	SELF 22µH 10%	CM453232-220K	1	SECRE	1812
L11		95400012	SELF 22µH 10%	CM453232-220K	1	SECRE	1812
L12		95400012	SELF 22µH 10%	CM453232-220K	1	SECRE	1812
L13		95400012	SELF 22µH 10%	CM453232-220K	1	SECRE	1812
L14		95400012	SELF 22µH 10%	CM453232-220K	1	SECRE	1812
L15		95400012	SELF 22µH 10%	CM453232-220K	1	SECRE	1812
L16		95400012	SELF 22µH 10%	CM453232-220K	1	SECRE	1812
L17		95400012	SELF 22µH 10%	CM453232-220K	1	SECRE	1812
L18		95400012	SELF 22µH 10%	CM453232-220K	1	SECRE	1812
OSC1		95010013	OSCILLATEUR	NCH080C/20MHz	1	SARONIX	DIP14
OSC2		95010022	OSCILLATEUR	NCH080C/13MHz	1	SARONIX	DIP14
R1		95610012	RESISTANCE	10 KOHMS 5% 1/8W	1		0805
R2		95610012	RESISTANCE	10 KOHMS 5% 1/8W	1		0805
R3		95610012	RESISTANCE	10 KOHMS 5% 1/8W	1		0805
R4		95610012	RESISTANCE	10 KOHMS 5% 1/8W	1		0805
R5		95610012	RESISTANCE	10 KOHMS 5% 1/8W	1		0805
R6		95610012	RESISTANCE	10 KOHMS 5% 1/8W	1		0805
R7		95610012	RESISTANCE	10 KOHMS 5% 1/8W	1		0805
R8		95610012	RESISTANCE	10 KOHMS 5% 1/8W	1		0805
R9		95610012	RESISTANCE	10 KOHMS 5% 1/8W	1		0805
R10		95610012	RESISTANCE	10 KOHMS 5% 1/8W	1		0805
R11		95610012	RESISTANCE	10 KOHMS 5% 1/8W	1		0805
R12		95610012	RESISTANCE	10 KOHMS 5% 1/8W	1		0805
R13		95610012	RESISTANCE	10 KOHMS 5% 1/8W	1		0805
R14		95610012	RESISTANCE	10 KOHMS 5% 1/8W	1		0805
R15		95610012	RESISTANCE	10 KOHMS 5% 1/8W	1		0805
R16		95610012	RESISTANCE	10 KOHMS 5% 1/8W	1		0805
R17		95610013	RESISTANCE	1 KOHMS 5% 1/8W	1		0805
R18		95610013	RESISTANCE	1 KOHMS 5% 1/8W	1		0805
R19		95610012	RESISTANCE	10 KOHMS 5% 1/8W	1		0805
R20		95610018	RESISTANCE	1,5 KOHMS 5% 1/8W	1		0805
R21		95610018	RESISTANCE	1,5 KOHMS 5% 1/8W	1		0805
R22		95610012	RESISTANCE	10 KOHMS 5% 1/8W	1		0805
R23		95610012	RESISTANCE	10 KOHMS 5% 1/8W	1		0805
R24		95610012	RESISTANCE	10 KOHMS 5% 1/8W	1		0805
R25		95610012	RESISTANCE	10 KOHMS 5% 1/8W	1		0805
R26		95610012	RESISTANCE	10 KOHMS 5% 1/8W	1		0805
R27		95610012	RESISTANCE	10 KOHMS 5% 1/8W	1		0805
R28		95610012	RESISTANCE	10 KOHMS 5% 1/8W	1		0805
R29		95610012	RESISTANCE	10 KOHMS 5% 1/8W	1		0805
R30		95610014	RESISTANCE	470 OHMS 5% 1/8W	1		0805
R31		95610014	RESISTANCE	470 OHMS 5% 1/8W	1		0805
R32		95610014	RESISTANCE	470 OHMS 5% 1/8W	1		0805
R33		95610014	RESISTANCE	470 OHMS 5% 1/8W	1		0805
R34		95610014	RESISTANCE	470 OHMS 5% 1/8W	1		0805
R35		95610014	RESISTANCE	470 OHMS 5% 1/8W	1		0805
R36		95610014	RESISTANCE	470 OHMS 5% 1/8W	1		0805
R37		95610012	RESISTANCE	10 KOHMS 5% 1/8W	1		0805

Pap Plus Board Extended Memory 42.355.278.89

REPERE	IND	COMPOSANT	DESIGNATION	VALEUR	QTE	FABRIQ.	BOITIER
R38		95610017	RESISTANCE	9,76KOHMS 1% 1/8W	1		0805
R39		95610016	RESISTANCE	10 KOHMS 5% 1/8W	1		0805
R40		95610012	RESISTANCE	10 KOHMS 5% 1/8W	1		0805
R41		95610012	RESISTANCE	10 KOHMS 5% 1/8W	1		0805
R42		95610012	RESISTANCE	10 KOHMS 5% 1/8W	1		0805
R43		95610012	RESISTANCE	10 KOHMS 5% 1/8W	1		0805
R44		95610012	RESISTANCE	10 KOHMS 5% 1/8W	1		0805
R45		95610015	RESISTANCE	4,7KOHMS 5% 1/8W	1		0805
R46		95610012	RESISTANCE	10 KOHMS 5% 1/8W	1		0805
R47		95610012	RESISTANCE	10 KOHMS 5% 1/8W	1		0805
R48		95610012	RESISTANCE	10 KOHMS 5% 1/8W	1		0805
R49		95610012	RESISTANCE	10 KOHMS 5% 1/8W	1		0805
R50		95610012	RESISTANCE	10 KOHMS 5% 1/8W	1		0805
R51		95610012	RESISTANCE	10 KOHMS 5% 1/8W	1		0805
R52		95610012	RESISTANCE	10 KOHMS 5% 1/8W	1		0805
R53		95610012	RESISTANCE	10 KOHMS 5% 1/8W	1		0805
R54		95610012	RESISTANCE	10 KOHMS 5% 1/8W	1		0805
R55		95610012	RESISTANCE	10 KOHMS 5% 1/8W	1		0805
R56		95610012	RESISTANCE	10 KOHMS 5% 1/8W	1		0805
R57		95610012	RESISTANCE	10 KOHMS 5% 1/8W	1		0805
R58		95610012	RESISTANCE	10 KOHMS 5% 1/8W	1		0805
R59		95610012	RESISTANCE	10 KOHMS 5% 1/8W	1		0805
R60		95610012	RESISTANCE	10 KOHMS 5% 1/8W	1		0805
R61		95610012	RESISTANCE	10 KOHMS 5% 1/8W	1		0805
R62		95610012	RESISTANCE	10 KOHMS 5% 1/8W	1		0805
R63		95610012	RESISTANCE	10 KOHMS 5% 1/8W	1		0805
R64		95610012	RESISTANCE	10 KOHMS 5% 1/8W	1		0805
R65		95610012	RESISTANCE	10 KOHMS 5% 1/8W	1		0805
R66		95610012	RESISTANCE	10 KOHMS 5% 1/8W	1		0805
R67		95610012	RESISTANCE	10 KOHMS 5% 1/8W	1		0805
R68		95610012	RESISTANCE	10 KOHMS 5% 1/8W	1		0805
R69		95610012	RESISTANCE	10 KOHMS 5% 1/8W	1		0805
R70		95610012	RESISTANCE	10 KOHMS 5% 1/8W	1		0805
R71		95610012	RESISTANCE	10 KOHMS 5% 1/8W	1		0805
R72		95610012	RESISTANCE	10 KOHMS 5% 1/8W	1		0805
R73		95610012	RESISTANCE	10 KOHMS 5% 1/8W	1		0805
R74		95610012	RESISTANCE	10 KOHMS 5% 1/8W	1		0805
R75		95610012	RESISTANCE	10 KOHMS 5% 1/8W	1		0805
R76		95610012	RESISTANCE	10 KOHMS 5% 1/8W	1		0805
R77		95610012	RESISTANCE	10 KOHMS 5% 1/8W	1		0805
R78		95610012	RESISTANCE	10 KOHMS 5% 1/8W	1		0805
R79		95610012	RESISTANCE	10 KOHMS 5% 1/8W	1		0805
R80		95610012	RESISTANCE	10 KOHMS 5% 1/8W	1		0805
R81		95610012	RESISTANCE	10 KOHMS 5% 1/8W	1		0805
R82		95610012	RESISTANCE	10 KOHMS 5% 1/8W	1		0805
R83		95610012	RESISTANCE	10 KOHMS 5% 1/8W	1		0805
R84		95610012	RESISTANCE	10 KOHMS 5% 1/8W	1		0805
R85		95610012	RESISTANCE	10 KOHMS 5% 1/8W	1		0805
R86		95610012	RESISTANCE	10 KOHMS 5% 1/8W	1		0805
R87		95610012	RESISTANCE	10 KOHMS 5% 1/8W	1		0805
R88		95610012	RESISTANCE	10 KOHMS 5% 1/8W	1		0805
R89		95610012	RESISTANCE	10 KOHMS 5% 1/8W	1		0805
R90		95610012	RESISTANCE	10 KOHMS 5% 1/8W	1		0805
R91		95610012	RESISTANCE	10 KOHMS 5% 1/8W	1		0805
R92		95610012	RESISTANCE	10 KOHMS 5% 1/8W	1		0805
R93		95610012	RESISTANCE	10 KOHMS 5% 1/8W	1		0805
R94		95610012	RESISTANCE	10 KOHMS 5% 1/8W	1		0805
R95		95610012	RESISTANCE	10 KOHMS 5% 1/8W	1		0805
R96		95610012	RESISTANCE	10 KOHMS 5% 1/8W	1		0805
R97		95610012	RESISTANCE	10 KOHMS 5% 1/8W	1		0805
R98		95610012	RESISTANCE	10 KOHMS 5% 1/8W	1		0805
R99		95610012	RESISTANCE	10 KOHMS 5% 1/8W	1		0805
R100		95610012	RESISTANCE	10 KOHMS 5% 1/8W	1		0805
R101		95610012	RESISTANCE	10 KOHMS 5% 1/8W	1		0805
R102		95610012	RESISTANCE	10 KOHMS 5% 1/8W	1		0805
R103		95610012	RESISTANCE	10 KOHMS 5% 1/8W	1		0805
R104		95610012	RESISTANCE	10 KOHMS 5% 1/8W	1		0805
R105		95610012	RESISTANCE	10 KOHMS 5% 1/8W	1		0805
R106		95610012	RESISTANCE	10 KOHMS 5% 1/8W	1		0805
R107		95610012	RESISTANCE	10 KOHMS 5% 1/8W	1		0805
R108		95610012	RESISTANCE	10 KOHMS 5% 1/8W	1		0805
R109		95610012	RESISTANCE	10 KOHMS 5% 1/8W	1		0805
R110		95610012	RESISTANCE	10 KOHMS 5% 1/8W	1		0805
R111		95610012	RESISTANCE	10 KOHMS 5% 1/8W	1		0805
R112		95610012	RESISTANCE	10 KOHMS 5% 1/8W	1		0805
R113		95610012	RESISTANCE	10 KOHMS 5% 1/8W	1		0805
R114		95610012	RESISTANCE	10 KOHMS 5% 1/8W	1		0805
R115		95610012	RESISTANCE	10 KOHMS 5% 1/8W	1		0805
R116		95610012	RESISTANCE	10 KOHMS 5% 1/8W	1		0805
R117		95610012	RESISTANCE	10 KOHMS 5% 1/8W	1		0805
R118		95610012	RESISTANCE	10 KOHMS 5% 1/8W	1		0805
R119		95610012	RESISTANCE	10 KOHMS 5% 1/8W	1		0805
R120		95610012	RESISTANCE	10 KOHMS 5% 1/8W	1		0805
R121		95610012	RESISTANCE	10 KOHMS 5% 1/8W	1		0805
R122		95610012	RESISTANCE	10 KOHMS 5% 1/8W	1		0805
R123		95610012	RESISTANCE	10 KOHMS 5% 1/8W	1		0805
R124		95610012	RESISTANCE	10 KOHMS 5% 1/8W	1		0805
R125		95610012	RESISTANCE	10 KOHMS 5% 1/8W	1		0805
R126		95610012	RESISTANCE	10 KOHMS 5% 1/8W	1		0805
R127		95610012	RESISTANCE	10 KOHMS 5% 1/8W	1		0805
R128		95610012	RESISTANCE	10 KOHMS 5% 1/8W	1		0805
R129		95610012	RESISTANCE	10 KOHMS 5% 1/8W	1		0805
R130		95610012	RESISTANCE	10 KOHMS 5% 1/8W	1		0805
R131		95610012	RESISTANCE	10 KOHMS 5% 1/8W	1		0805
R132		95610012	RESISTANCE	10 KOHMS 5% 1/8W	1		0805
R133		95610012	RESISTANCE	10 KOHMS 5% 1/8W	1		0805
R134		95610012	RESISTANCE	10 KOHMS 5% 1/8W	1		0805
R135		95610012	RESISTANCE	10 KOHMS 5% 1/8W	1		0805
R136		95610012	RESISTANCE	10 KOHMS 5% 1/8W	1		0805
R137		95610012	RESISTANCE	10 KOHMS 5% 1/8W	1		0805
R138		95610012	RESISTANCE	10 KOHMS 5% 1/8W	1		0805
R139		95610012	RESISTANCE	10 KOHMS 5% 1/8W	1		0805
R140		95610012	RESISTANCE	10 KOHMS 5% 1/8W	1		0805
R141		95610012	RESISTANCE	10 KOHMS 5% 1/8W	1		0805
R142		95610012	RESISTANCE	10 KOHMS 5% 1/8W	1		0805
R143		95610012	RESISTANCE	10 KOHMS 5% 1/8W	1		0805
R144		95610012	RESISTANCE	10 KOHMS 5% 1/8W	1		0805
R145		95610012	RESISTANCE	10 KOHMS 5% 1/8W	1		0805
R146		95610012	RESISTANCE	10 KOHMS 5% 1/8W	1		0805
R147		95610012	RESISTANCE	10 KOHMS 5% 1/8W	1		0805
R148		95610012	RESISTANCE	10 KOHMS 5% 1/8W	1		0805
R149		95610012	RESISTANCE	10 KOHMS 5% 1/8W	1		0805
R150		95610012	RESISTANCE	10 KOHMS 5% 1/8W	1		0805
R151		95610012	RESISTANCE	10 KOHMS 5% 1/8W	1		0805
R152		95610012	RESISTANCE	10 KOHMS 5% 1/8W	1		0805
R153		95610012	RESISTANCE	10 KOHMS 5% 1/8W	1		0805
R154		95610012	RESISTANCE	10 KOHMS 5% 1/8W	1		0805
R155		95610012	RESISTANCE	10 KOHMS 5% 1/8W	1		0805
R156		95610012	RESISTANCE	10 KOHMS 5% 1/8W	1		0805
R157		95610012	RESISTANCE	10 KOHMS 5% 1/8W	1		0805
R158		95610012	RESISTANCE	10 KOHMS 5% 1/8W	1		0805
R159		95610012	RESISTANCE	10 KOHMS 5% 1/8W	1		0805
R160		95610012	RESISTANCE	10 KOHMS 5% 1/8W	1		0805
R161		95610012	RESISTANCE	10 KOHMS 5% 1/8W	1		0805
R162		95610012	RESISTANCE	10 KOHMS 5% 1/8W	1		0805
R163		95610012	RESISTANCE	10 KOHMS 5% 1/8W	1		0805
R164		95610012	RESISTANCE	10 KOHMS 5% 1/8W	1		0805
R165		95610012	RESISTANCE	10 KOHMS 5% 1/8W	1		0805
R166		95610012	RESISTANCE	10 KOHMS 5% 1/8W	1		0805
R167		95610012	RESISTANCE	10 KOHMS 5% 1/8W	1		0805
R168		95610012	RESISTANCE	10 KOHMS 5% 1/8W	1		0805
R169		95610012	RESISTANCE	10 KOHMS 5% 1/8W	1		0805
R170		95610012	RESISTANCE	10 KOHMS 5% 1/8W	1		0805
R171		95610012	RESISTANCE	10 KOHMS 5% 1/8W	1		0805
R172		95610012	RESISTANCE	10 KOHMS 5% 1/8W	1		0805
R173		95610012	RESISTANCE	10 KOHMS 5% 1/8W	1		0805
R174		95610013	RESISTANCE	1 KOHMS 5% 1/8W	1		0805
R175		95610012	RESISTANCE	10 KOHMS 5% 1/8W	1		0805
R176		95610012	RESISTANCE	10 KOHMS 5% 1/8W	1		0805
R177		95610012	RESISTANCE	10 KOHMS 5% 1/8W	1		0805
R178		95610012	RESISTANCE	10 KOHMS 5% 1/8W	1		0805
R179		95610019	RESISTANCE	220 OHMS 5% 1/8W	1		0805
R180		95610019	RESISTANCE	220 OHMS 5% 1/8W	1		0805
R181		95610019	RESISTANCE	220 OHMS 5% 1/8W	1		0805
R182		95610020	RESISTANCE	330 OHMS 5% 1/8W	1		0805
R183		95610020	RESISTANCE	330 OHMS 5% 1/8W	1		0805
R184		95610020	RESISTANCE	330 OHMS 5% 1/8W	1		0805
R185		95610012	RESISTANCE	10 KOHMS 5% 1/8W	1		0805
R186		95610012	RESISTANCE	10 KOHMS 5% 1/8W	1		0805
R187		95610012	RESISTANCE	10 KOHMS 5% 1/8W	1		0805
R188		95610012	RESISTANCE	10 KOHMS 5% 1/8W	1		0805
R189	1a	95610012	RESISTANCE	10 KOHMS 5% 1/8W	1		0805
R190	1a	95610012	RESISTANCE	10 KOHMS 5% 1/8W	1		0805
R191	1a	95610012	RESISTANCE	10 KOHMS 5% 1/8W	1		0805
R192	1a	95610012	RESISTANCE	10 KOHMS 5% 1/8W	1		0805
R193	1a	95610012	RESISTANCE	10 KOHMS 5% 1/8W	1		0805
R194	1a	95610012	RESISTANCE	10 KOHMS 5% 1/8W	1		0805
ST1	1s		NEANT		0		
ST2	1s		NEANT		0		
ST3	1s		NEANT		0		
ST4	1s		NEANT		0		
ST5	1s		NEANT		0		
ST6	1s		NEANT		0		
ST7	1s		NEANT		0		
ST8	1s		NEANT		0		
ST9	1s		NEANT		0		
ST10	1s		NEANT		0		
ST11	1s		NEANT		0		
ST12	1s		NEANT		0		
ST13	1s		NEANT		0		
ST14	1s		NEANT		0		
ST15	1s		NEANT		0		
ST16	1s		NEANT		0		
ST17	1s		NEANT		0		
ST18	1s		NEANT		0		
ST19	1s		NEANT		0		

Pap Plus Board Extended Memory 42.355.278.89

REPERE	IND	COMPOSANT	DESIGNATION	VALEUR	QTE	FABRIQ.	BOITIER
ST20	1s		NEANT		0		
ST21	1s		NEANT		0		
ST22	1s		NEANT		0		
ST23	1s		NEANT		0		
ST24	1s		NEANT		0		
ST25	1s		NEANT		0		
ST26	1s		NEANT		0		
ST27	1s		NEANT		0		
ST28	1s		NEANT		0		
SW1	1m	94420301	REPART MINI WRAP	381-0435-1-20-50-0	0.10	COMATEL	
SW2		94563003	POUSSOIR	9233WWCD	1	APR	
TP1		94450009	REPART MINI WRAP	385-0358-1-40-40-0	.025	COMATEL	
TP2		94450009	REPART MINI WRAP	385-0358-1-40-40-0	.025	COMATEL	
TP3		94450009	REPART MINI WRAP	385-0358-1-40-40-0	.025	COMATEL	
TP4		94450009	REPART MINI WRAP	385-0358-1-40-40-0	.025	COMATEL	
TP5		94450009	REPART MINI WRAP	385-0358-1-40-40-0	.025	COMATEL	
TP6		94450009	REPART MINI WRAP	385-0358-1-40-40-0	.025	COMATEL	
TP7		94450009	REPART MINI WRAP	385-0358-1-40-40-0	.025	COMATEL	
TP8		94450009	REPART MINI WRAP	385-0358-1-40-40-0	.025	COMATEL	
TP9		94450009	REPART MINI WRAP	385-0358-1-40-40-0	.025	COMATEL	
TP10		94450009	REPART MINI WRAP	385-0358-1-40-40-0	.025	COMATEL	
TP11	3m	94450009	BARRETTE MINI WRAP	385-0358-1-40-40-0	.025	COMATEL	
TP12	1m	94420301	REPART MINI WRAP	381-0435-1-20-50-0	0.10	COMATEL	
TP13	3s	94320085	BARRETTE MAL 11Pts	AM1D-127-20-6,3-T	0	ANTELEC	
TP14	3s	94320085	BARRETTE MAL 11Pts	AM1D-127-20-6,3-T	0	ANTELEC	
TP15	3s	94320085	BARRETTE MAL 11Pts	AM1D-127-20-6,3-T	0	ANTELEC	
TP16	3s	94320085	BARRETTE MAL 11Pts	AM1D-127-20-6,3-T	0	ANTELEC	
TP17	3s	94320085	BARRETTE MAL 11Pts	AM1D-127-20-6,3-T	0	ANTELEC	
TP18	3s	94320085	BARRETTE MAL 11Pts	AM1D-127-20-6,3-T	0	ANTELEC	
TP19	3s	94320085	BARRETTE MAL 11Pts	AM1D-127-20-6,3-T	0	ANTELEC	
TP20	3s	94320085	BARRETTE MAL 11Pts	AM1D-127-20-6,3-T	0	ANTELEC	
TP21	3s	94320085	BARRETTE MAL 11Pts	AM1D-127-20-6,3-T	0	ANTELEC	
TP22		94450009	REPART MINI WRAP	385-0358-1-40-40-0	.025	COMATEL	
TP23		94450009	REPART MINI WRAP	385-0358-1-40-40-0	.025	COMATEL	
TP24		94450009	REPART MINI WRAP	385-0358-1-40-40-0	.025	COMATEL	
TP25	3s	94320085	BARRETTE MAL 11Pts	AM1D-127-20-6,3-T	0	ANTELEC	
TP26	3s	94320085	BARRETTE MAL 11Pts	AM1D-127-20-6,3-T	0	ANTELEC	
TP27		94450009	REPART MINI WRAP	385-0358-1-40-40-0	.025	COMATEL	
TP28		94450009	REPART MINI WRAP	385-0358-1-40-40-0	.025	COMATEL	
TP29	3s	94320085	BARRETTE MAL 4Pts	AM1D-127-20-6,3-T	0	ANTELEC	
TP30	3s	94320085	BARRETTE MAL 8Pts	AM1D-127-20-6,3-T	0	ANTELEC	
TP31	1m	94320085	BARRETTE MAL 11Pts	AM1D-127-20-6,3-T	0.55	ANTELEC	
TP32	3s	94320085	BARRETTE MAL 8Pts	AM1D-127-20-6,3-T	0	ANTELEC	
TP33	3s	94320085	BARRETTE MAL 5Pts	AM1D-127-20-6,3-T	0	ANTELEC	
TP34	1m	94320085	BARRETTE MAL 11Pts	AM1D-127-20-6,3-T	0.55	ANTELEC	
TP35	1m	94320085	BARRETTE MAL 8Pts	AM1D-127-20-6,3-T	0.4	ANTELEC	
TP36		94450009	REPART MINI WRAP	385-0358-1-40-40-0	.025	COMATEL	
TP37		94320085	BARRETTE FEM 6Pts	AM1D-127-20-6,3-T	0.3	ANTELEC	
TP38		94320085	BARRETTE MAL 3Pts	AM1D-127-20-6,3-T	0.15	ANTELEC	
TP39		94450009	REPART MINI WRAP	385-0358-1-40-40-0	.025	COMATEL	
TP40		94450009	REPART MINI WRAP	385-0358-1-40-40-0	.025	COMATEL	
TP41		94450009	REPART MINI WRAP	385-0358-1-40-40-0	.025	COMATEL	
TP42	1s		NEANT				
TP43		94320085	BARRETTE MAL 3Pts	AM1D-127-20-6,3-T	0.15	ANTELEC	
TP44		94320085	BARRETTE MAL 4Pts	AM1D-127-20-6,3-T	0.2	ANTELEC	
TP45	3s	94320085	BARRETTE MAL 6Pts	AM1D-127-20-6,3-T	0	ANTELEC	
TP46	1m	94420301	REPART MINI WRAP	381-0435-1-20-50-0	0.10	COMATEL	
TP47		94450009	REPART MINI WRAP	385-0358-1-40-40-0	.025	COMATEL	
TP48	1s		NEANT				
TP49	1a	94450009	REPART MINI WRAP	385-0358-1-40-40-0	.025	COMATEL	
TP50	1a	94450009	REPART MINI WRAP	385-0358-1-40-40-0	.025	COMATEL	
TP51	1a	94450009	REPART MINI WRAP	385-0358-1-40-40-0	.025	COMATEL	
TP52	1a	94450009	REPART MINI WRAP	385-0358-1-40-40-0	.025	COMATEL	
TP53	1a	94450009	REPART MINI WRAP	385-0358-1-40-40-0	.025	COMATEL	
U1	3m		CIRCUIT INTEGRE	DSP56002-FC66	1	MOTOROLA	PQFP132
U2		95300206	CIRCUIT INTEGRE	PAL16L8-5JC	1	AMD	PLCC20
U2		00010155	PROGRAMME	"CELXPP"	1		
U3		95300184	CIRCUIT INTEGRE	7130-LA20J	1	IDT	PLCC52
U4		95300184	CIRCUIT INTEGRE	7130-LA20J	1	IDT	PLCC52
U5	3m		CIRCUIT INTEGRE	XC4003A-5 PQ100C	1	XILINX	PQFP100
U6		95300207	CIRCUIT INTEGRE	PC74HCT157T	1	PHILIPS	SO16
U7		95300184	CIRCUIT INTEGRE	7130-LA20J	1	IDT	PLCC52
U8		95300208	CIRCUIT INTEGRE	74ACT08SC	1	NATIONAL	SO14
U9	3m		CIRCUIT INTEGRE	DSP56002-FC66	1	MOTOROLA	PQFP132
U10		95300184	CIRCUIT INTEGRE	7130-LA20J	1	IDT	PLCC52
U11		95300184	CIRCUIT INTEGRE	7130-LA20J	1	IDT	PLCC52
U12	3m		CIRCUIT INTEGRE	XC4003A-5 PQ100C	1	XILINX	PQFP100
U13		95300184	CIRCUIT INTEGRE	7130-LA20J	1	IDT	PLCC52
U14		95300207	CIRCUIT INTEGRE	PC74HCT157T	1	PHILIPS	SO16
U15		95300179	CIRCUIT INTEGRE	74FCT833BSO	1	IDT	SOL24
U16		95300179	CIRCUIT INTEGRE	74FCT833BSO	1	IDT	SOL24
U17		95300209	CIRCUIT INTEGRE	DS1000Z-60	1	DALLAS	SO8
U18		95300210	CIRCUIT INTEGRE	74ABT244	1	TEXAS	DIP20
U19		95300211	CIRCUIT INTEGRE	74F08SC	1	NATIONAL	SO14
U20		95300212	CIRCUIT INTEGRE	74HC151T	1	PHILIPS	SO16
U21		95300185	CIRCUIT INTEGRE	AM29F010-120PC	1	AMD	DIP32
U21		00010158	PROGRAMME	"XILPP"	1	AMD	DIP32
U22		95300036	CIRCUIT INTEGRE	27C010-150DC	1	ATHEL	DIP32
U22		00010157	PROGRAMME	"PAPPLUS"	1	ATHEL	DIP32
U23		95300179	CIRCUIT INTEGRE	74FCT833BSO	1	IDT	SOL24
U24		95300194	CIRCUIT INTEGRE	74FCT652CTPY	1	IDT	SSOP24
U25		95300194	CIRCUIT INTEGRE	74FCT652CTPY	1	IDT	SSOP24
U26		95300194	CIRCUIT INTEGRE	74FCT652CTPY	1	IDT	SSOP24
U27		95300194	CIRCUIT INTEGRE	74FCT652CTPY	1	IDT	SSOP24
U28		95300194	CIRCUIT INTEGRE	74FCT652CTPY	1	IDT	SSOP24
U29		95300193	CIRCUIT INTEGRE	74FCT821CTPY	1	IDT	SSOP24
U30		95300193	CIRCUIT INTEGRE	74FCT821CTPY	1	IDT	SSOP24
U31		95300193	CIRCUIT INTEGRE	74FCT821CTPY	1	IDT	SSOP24
U32		95300193	CIRCUIT INTEGRE	74FCT821CTPY	1	IDT	SSOP24
U33		95300193	CIRCUIT INTEGRE	74FCT821CTPY	1	IDT	SSOP24
U34		95360202	CIRCUIT INTEGRE	PAL16R4-7	1		DIP20
U34		00010041	PROGRAMME	"SONRD"	1		
U35		95360202	CIRCUIT INTEGRE	PAL16R4-7	1		DIP20
U35		00010042	PROGRAMME	"SONWR"	1		
U36		95300213	CIRCUIT INTEGRE	PC74HC123T	1	PHILIPS	SO16
U37		95300214	CIRCUIT INTEGRE	74F00SC	1	NATIONAL	SO14
U38		95300192	CIRCUIT INTEGRE	74FCT245CTPY	1	IDT	SSOP20
U39		95300215	CIRCUIT INTEGRE	PC74HC85T	1	PHILIPS	SO16
U40		95300194	CIRCUIT INTEGRE	74FCT652CTPY	1	IDT	SSOP24
U41		95300179	CIRCUIT INTEGRE	74FCT833BSO	1	IDT	SOL24
U42		95300208	CIRCUIT INTEGRE	74ACT08SC	1	NATIONAL	SO14
U43		95300216	CIRCUIT INTEGRE	DS26C32ACM	1	NATIONAL	SO16
U44	3m		CIRCUIT INTEGRE	DSP56002-FC66	1	MOTOROLA	PQFP132
U45		95300184	CIRCUIT INTEGRE	7130-LA20J	1	IDT	PLCC52
U46		95161075	CIRCUIT INTEGRE	5082-7730	1	HEWLETT	DIP14
U47		95300184	CIRCUIT INTEGRE	7130-LA20J	1	IDT	PLCC52
U48	3m		CIRCUIT INTEGRE	XC4003A-5 PQ100C	1	XILINX	PQFP100
U49		95300192	CIRCUIT INTEGRE	74FCT245CTPY	1	IDT	SSOP20
U50		95300184	CIRCUIT INTEGRE	7130-LA20J	1	IDT	PLCC52
U51		95300207	CIRCUIT INTEGRE	PC74HCT157T	1	PHILIPS	SO16
U52		95300217	CIRCUIT INTEGRE	PALCE610H-15PC	1	AMD	DIP24 Et
U52		00010148	PROGRAMME	"FEPP"	1		
U53		95300192	CIRCUIT INTEGRE	74FCT245CTPY	1	IDT	SSOP20
U54		95300192	CIRCUIT INTEGRE	74FCT245CTPY	1	IDT	SSOP20
U55		95300191	CIRCUIT INTEGRE	74FCT244CTPY	1	IDT	SSOP20
U56		95300218	CIRCUIT INTEGRE	7406D	1	RTC	SO14
U57		95360208	CIRCUIT INTEGRE	PALCE22V10Q-25PC	1	AMD	DIP24 Et
U57		00010131	PROGRAMME	"SRQMAD"	1		
U58		95300093	CIRCUIT INTEGRE	PALCE22V10H-15PC	1	AMD	DIP24 Et
U58		00010154	PROGRAMME	"PARPAPP"	1		
U59		95300191	CIRCUIT INTEGRE	74FCT244CTPY	1	IDT	SSOP20
U60		95300191	CIRCUIT INTEGRE	74FCT244CTPY	1	IDT	SSOP20
U61		95300192	CIRCUIT INTEGRE	74FCT245CTPY	1	IDT	SSOP20
U62		95300191	CIRCUIT INTEGRE	74FCT244CTPY	1	IDT	SSOP20
U63	3m		CIRCUIT INTEGRE	XC4005-5PQ160C	1	XILINX	PQFP160
U64	3m		CIRCUIT INTEGRE	XC4005-5PQ160C	1	XILINX	PQFP160
U65	3m		CIRCUIT INTEGRE	XC4010-5MQ208C	1	XILINX	PQFP208
U66	3m		CIRCUIT INTEGRE	DSP56004-FJ50	1	MOTOROLA	PQFP80
U67	3m		CIRCUIT INTEGRE	DSP56004-FJ50	1	MOTOROLA	PQFP80
U68	3m		CIRCUIT INTEGRE	DSP56004-FJ50	1	MOTOROLA	PQFP80
U69	3m		CIRCUIT INTEGRE	DSP56004-FJ50	1	MOTOROLA	PQFP80
U70	3m		CIRCUIT INTEGRE	DSP56004-FJ50	1	MOTOROLA	PQFP80
U71		95300208	CIRCUIT INTEGRE	74ACT08SC	1	NATIONAL	SO14
U72		95300192	CIRCUIT INTEGRE	74FCT245CTPY	1	IDT	SSOP20
U73		95300192	CIRCUIT INTEGRE	74FCT245CTPY	1	IDT	SSOP20
U74		95300194	CIRCUIT INTEGRE	74FCT652CTPY	1	IDT	SSOP24
U75		95300194	CIRCUIT INTEGRE	74FCT652CTPY	1	IDT	SSOP24
U76		95300192	CIRCUIT INTEGRE	74FCT245CTPY	1	IDT	SSOP20
U77		95300192	CIRCUIT INTEGRE	74FCT245CTPY	1	IDT	SSOP20
U78		95300219	CIRCUIT INTEGRE	MAX697CWE	1	MAXIM	SOL16
U79		95300220	CIRCUIT INTEGRE	MAX232ACSE	1	MAXIM	SO16
U80		95340006	CIRCUIT INTEGRE	75174	1		DIP16
U81	3m		CIRCUIT INTEGRE	DSP56004-FJ50	1	MOTOROLA	PQFP80
U82	3m		CIRCUIT INTEGRE	DSP56004-FJ50	1	MOTOROLA	PQFP80
U83	3m		CIRCUIT INTEGRE	DSP56004-FJ50	1	MOTOROLA	PQFP80
U84	3m		CIRCUIT INTEGRE	XC4005-5PQ160C	1	XILINX	PQFP160
U85		95300191	CIRCUIT INTEGRE	74FCT244CTPY	1	IDT	SSOP20
U86		95300207	CIRCUIT INTEGRE	PC74HCT157T	1	PHILIPS	SO16
U87		95300207	CIRCUIT INTEGRE	PC74HCT157T	1	PHILIPS	SO16
U88		95300208	CIRCUIT INTEGRE	74ACT08SC	1	NATIONAL	SO14
U89		95300191	CIRCUIT INTEGRE	74FCT244CTPY	1	IDT	SSOP20
U90		95300191	CIRCUIT INTEGRE	74FCT244CTPY	1	IDT	SSOP20
U91		95300196	CIRCUIT INTEGRE	74FCT16823CTPV	1	IDT	SSOP56
U92		95300196	CIRCUIT INTEGRE	74FCT16823CTPV	1	IDT	SSOP56
U93		95300191	CIRCUIT INTEGRE	74FCT244CTPY	1	IDT	SSOP20
U94		95300192	CIRCUIT INTEGRE	74FCT245CTPY	1	IDT	SSOP20
U95		95300184	CIRCUIT INTEGRE	7130-LA20J	1	IDT	PLCC52
U96		95300184	CIRCUIT INTEGRE	7130-LA20J	1	IDT	PLCC52
U97		95300184	CIRCUIT INTEGRE	7130-LA20J	1	IDT	PLCC52
U98	3m		CIRCUIT INTEGRE	DSP56002-FC66	1	MOTOROLA	PQFP132
U99		95300184	CIRCUIT INTEGRE	7130-LA20J	1	IDT	PLCC52
U100		95300184	CIRCUIT INTEGRE	7130-LA20J	1	IDT	PLCC52
U101	3m		CIRCUIT INTEGRE	XC4003A-5PQ100C	1	XILINX	PQFP100
U102		95300184	CIRCUIT INTEGRE	7130-LA20J	1	IDT	PLCC52
U103		95300207	CIRCUIT INTEGRE	PC74HCT157T	1	PHILIPS	SO16
U104		95300194	CIRCUIT INTEGRE	74FCT652CTPY	1	IDT	SSOP24

Pap Plus Board Extended Memory 42.355.278.89

REPERE	IND	COMPOSANT	DESIGNATION	VALEUR	QTE	FABRIQ.	BOITIER
U105		95300206	CIRCUIT INTEGRE	PAL16L8-5JC	1	AMD	PLCC20
U105		00010155	PROGRAMME	"CELXPP"	1		
U106		95300194	CIRCUIT INTEGRE	74FCT652CTPY	1	IDT	SSOP24
U107		95300192	CIRCUIT INTEGRE	74FCT245CTPY	1	IDT	SSOP20
U108	3m		CIRCUIT INTEGRE	DSP56002-FC66	1	MOTOROLA	PQFP132
U109		95300184	CIRCUIT INTEGRE	7130-LA20J	1	IDT	PLCC52
U110		95300184	CIRCUIT INTEGRE	7130-LA20J	1	IDT	PLCC52
U111	3m		CIRCUIT INTEGRE	XC4003A-5PQ100C	1	XILINX	PQFP100
U112		95300184	CIRCUIT INTEGRE	7130-LA20J	1	IDT	PLCC52
U113		95300206	CIRCUIT INTEGRE	PAL16L8-5JC	1	AMD	PLCC20
U113		00010155	PROGRAMME	"CELXPP"	1		
U114	3m		CIRCUIT INTEGRE	DSP56002-FC66	1	MOTOROLA	PQFP132
U115		95300184	CIRCUIT INTEGRE	7130-LA20J	1	IDT	PLCC52
U116		95300184	CIRCUIT INTEGRE	7130-LA20J	1	IDT	PLCC52
U117	3m		CIRCUIT INTEGRE	XC4003A-5PQ100C	1	XILINX	PQFP100
U118		95300184	CIRCUIT INTEGRE	7130-LA20J	1	IDT	PLCC52
U119		95300207	CIRCUIT INTEGRE	PC74HCT157T	1	PHILIPS	SO16
U120		95300207	CIRCUIT INTEGRE	PC74HCT157T	1	PHILIPS	SO16
U121		95300208	CIRCUIT INTEGRE	74ACT08SC	1	NATIONAL	SO14
U122	3m		CIRCUIT INTEGRE	DSP56002-FC66	1	MOTOROLA	PQFP132
U123		95300184	CIRCUIT INTEGRE	7130-LA20J	1	IDT	PLCC52
U124		95300184	CIRCUIT INTEGRE	7130-LA20J	1	IDT	PLCC52
U125	3m		CIRCUIT INTEGRE	XC4003A-5PQ100C	1	XILINX	PQFP100
U126		95300184	CIRCUIT INTEGRE	7130-LA20J	1	IDT	PLCC52
U127		95300206	CIRCUIT INTEGRE	PAL16L8-5JC	1	AMD	PLCC20
U127		00010155	PROGRAMME	"CELXPP"	1		
U128	3m		CIRCUIT INTEGRE	DSP56002-FC66	1	MOTOROLA	PQFP132
U129		95300184	CIRCUIT INTEGRE	7130-LA20J	1	IDT	PLCC52
U130		95300184	CIRCUIT INTEGRE	7130-LA20J	1	IDT	PLCC52
U131	3m		CIRCUIT INTEGRE	XC4003A-5PQ100C	1	XILINX	PQFP100
U132		95300184	CIRCUIT INTEGRE	7130-LA20J	1	IDT	PLCC52
U133		95300207	CIRCUIT INTEGRE	PC74HCT157T	1	PHILIPS	SO16
U134		95300207	CIRCUIT INTEGRE	PC74HCT157T	1	PHILIPS	SO16
U135		95300208	CIRCUIT INTEGRE	74ACT08SC	1	NATIONAL	SO14
U136		95300182	CIRCUIT INTEGRE	DSP56002-FC40	1	MOTOROLA	PQFP132
U137		95300184	CIRCUIT INTEGRE	7130-LA20J	1	IDT	PLCC52
U138		95300184	CIRCUIT INTEGRE	7130-LA20J	1	IDT	PLCC52
U139	3m		CIRCUIT INTEGRE	XC4003A-5PQ100C	1	XILINX	PQFP100
U140		95300184	CIRCUIT INTEGRE	7130-LA20J	1	IDT	PLCC52
U141		95300206	CIRCUIT INTEGRE	PAL16L8-5JC	1	AMD	PLCC20
U141		00010155	PROGRAMME	"CELXPP"	1		
U142	3m		CIRCUIT INTEGRE	DSP56002-FC66	1	MOTOROLA	PQFP132
U143		95300184	CIRCUIT INTEGRE	7130-LA20J	1	IDT	PLCC52
U144		95300184	CIRCUIT INTEGRE	7130-LA20J	1	IDT	PLCC52
U145	3m		CIRCUIT INTEGRE	XC4003A-5PQ100C	1	XILINX	PQFP100
U146		95300184	CIRCUIT INTEGRE	7130-LA20J	1	IDT	PLCC52
U147		95300207	CIRCUIT INTEGRE	PC74HCT157T	1	PHILIPS	SO16
U148		95300207	CIRCUIT INTEGRE	PC74HCT157T	1	PHILIPS	SO16
U149		95300208	CIRCUIT INTEGRE	74ACT08SC	1	NATIONAL	SO14
U150		95300221	CIRCUIT INTEGRE	PAL22V10-5	1	AMD	DIP24 Et
U150		00010156	PROGRAMME	"CEL9PP"	1		
U151		95300208	CIRCUIT INTEGRE	74ACT08SC	1	NATIONAL	SO14
U152		95300208	CIRCUIT INTEGRE	74ACT08SC	1	NATIONAL	SO14
U153		95300208	CIRCUIT INTEGRE	74ACT08SC	1	NATIONAL	SO14
U154		95300208	CIRCUIT INTEGRE	74ACT08SC	1	NATIONAL	SO14
U155		95300208	CIRCUIT INTEGRE	74ACT08SC	1	NATIONAL	SO14
U156		95300208	CIRCUIT INTEGRE	74ACT08SC	1	NATIONAL	SO14
U157		95300192	CIRCUIT INTEGRE	74FCT245CTPY	1	IDT	SSOP20
U158		95300192	CIRCUIT INTEGRE	74FCT245CTPY	1	IDT	SSOP20
U159		95300214	CIRCUIT INTEGRE	74F00SC	1	NATIONAL	SO14
U160		95300208	CIRCUIT INTEGRE	74ACT08SC	1	NATIONAL	SO14
USR1		94530081	ROUE CODEUSE	422066	1	HOPT-SHU	
X1		98230043	POIGNEE EXTRACTEUR	HAUTE REF:131177	0.1	SEEM	
X2		98230044	POIGNEE EXTRACTEUR	BASSE REF:131178	0.1	SEEM	
X3		97612205	VIS V126	CBL M2,5 x 8	2		
X4		97612202	VIS V126	CBL M2,5 x 5	2		
X5		97613203	VIS V106	F/90 M2,5 x 6	2		
X6	1s		NEANT		0		
X7		98230045	OEILLET + VIS	REF:492959	0.02	SEEM	
X8		94330007	SUPPORT LED	AST 0035-9660	2	SHURTER	
X9	1s		NEANT		0		
X10		97880003	ENTRETOISE EXALIS 4	LONGUEUR 5	6	ACCEL	
X11		94480023	VERROUILLAGE FEMELLE	8630-01-060	4	SOURIAU	
X12		94336008	SUPPORT 14Pts COUDE	A14-LED-H	1	ANTELEC	
X13		94480044	SUPPORT CI 4Pts(14)	110-91-314-10-001	2	PRECI-DI	
X14		94480303	SUPPORT CI 16Pts	T401-16	1		
X15		94480305	SUPPORT CI 20Pts	T401-20	3		
X16		94480313	SUPPORT CI 24Pts Etr	T401-24 Etroit	4		
X17		94483000	SUPPORT CI 32Pts	T401-32	2		
X18		94480045	SUPPORT PLCC 20Pts	SCC20T	5	ANTELEC	
X19	1s		NEANT		0		
X20	2a	88527880	CARTE MODULE 32K		4		
X21	2a	88527881	CARTE MODULE 128K		1		

Pap Plus Board Extended Memory 32k x 8 42.355.278.81

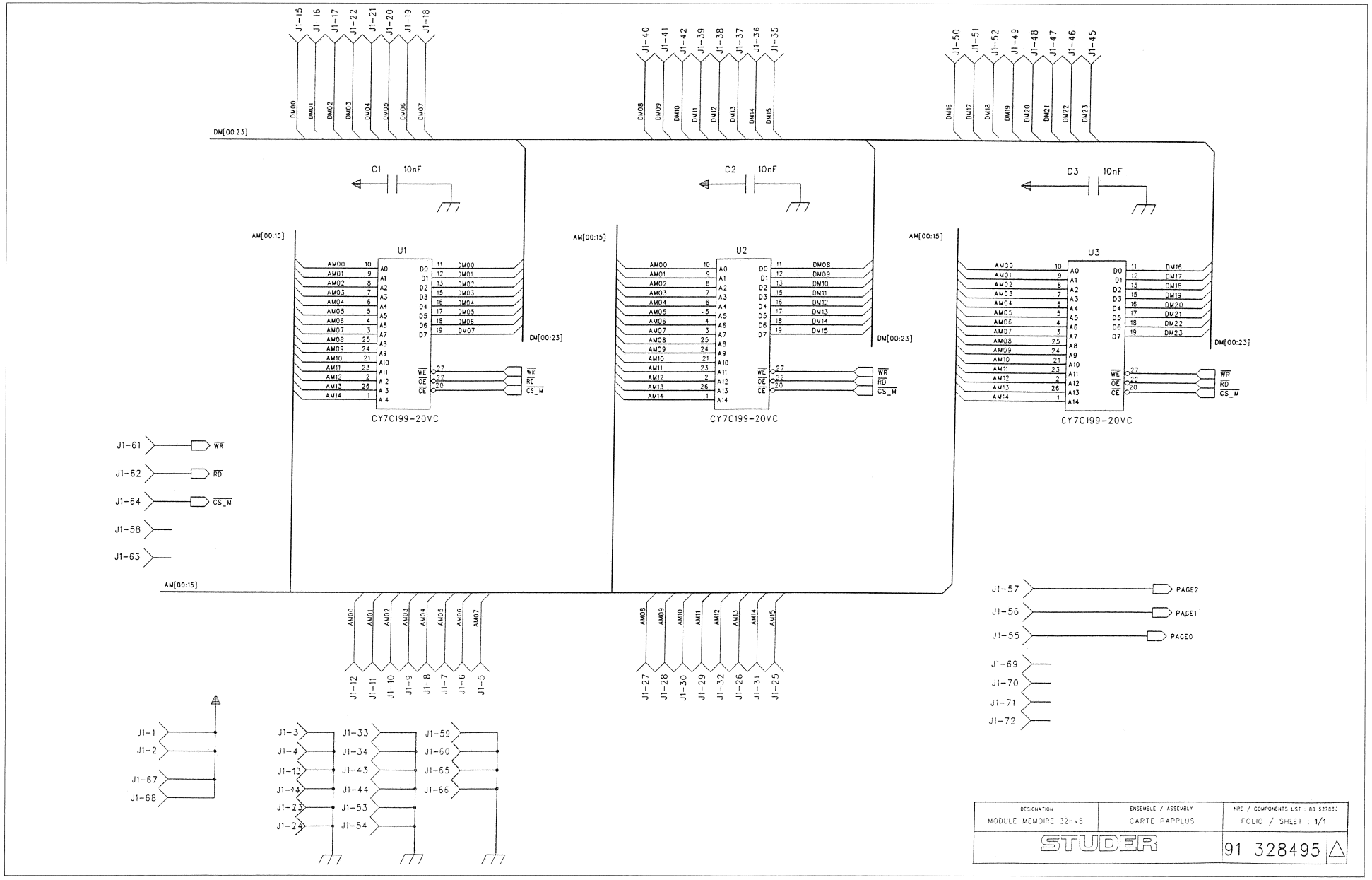

Pap Plus Board Extended Memory 32k x 8 42.355.278.81

MODIF.: IND. Xa=ajout - IND. Xm=modif. ref. et/ou valeur - IND. Xs=suppression

REPERE	IND	COMPOSANT	DESIGNATION	VALEUR	QTE	FABRIQ.	BOITIER
A1		91328495	SCHEMA		1		
A2		91830851	FILM CIRCUIT		1		
A3		30830851	TEST DE CONFORMITE		1		
A4		91830852	FILM DE SERIGRAPHIE		1		
A5		91830853	FILM EPARGNE SOUDURE		1		
A6		91830854	FILM PATE A BRASER		1		
A7		30830854	ECRAN PATE A BRASER		1		
A8		91328496	PLAN DE FABRICATION		1		
A9		30328496	OUTIL DE FABRICATION		1		
A10		91815505	ETIQUETTE REPERE CONNECTEUR		1		
C1		95500020	CONDENSATEUR X7R	10nF 20%	1		0805
C2		95500020	CONDENSATEUR X7R	10nF 20%	1		0805
C3		95500020	CONDENSATEUR X7R	10nF 20%	1		0805
U1		95300189	CIRCUIT INTEGRE	Cf7C199-20VC	1	CYPRESS	SOJ28
U2		95300189	CIRCUIT INTEGRE	Cf7C199-20VC	1	CYPRESS	SOJ28
U3		95300189	CIRCUIT INTEGRE	Cf7C199-20VC	1	CYPRESS	SOJ28

Pap Plus Board Extended Memory 128k x 8 42.355.278.80

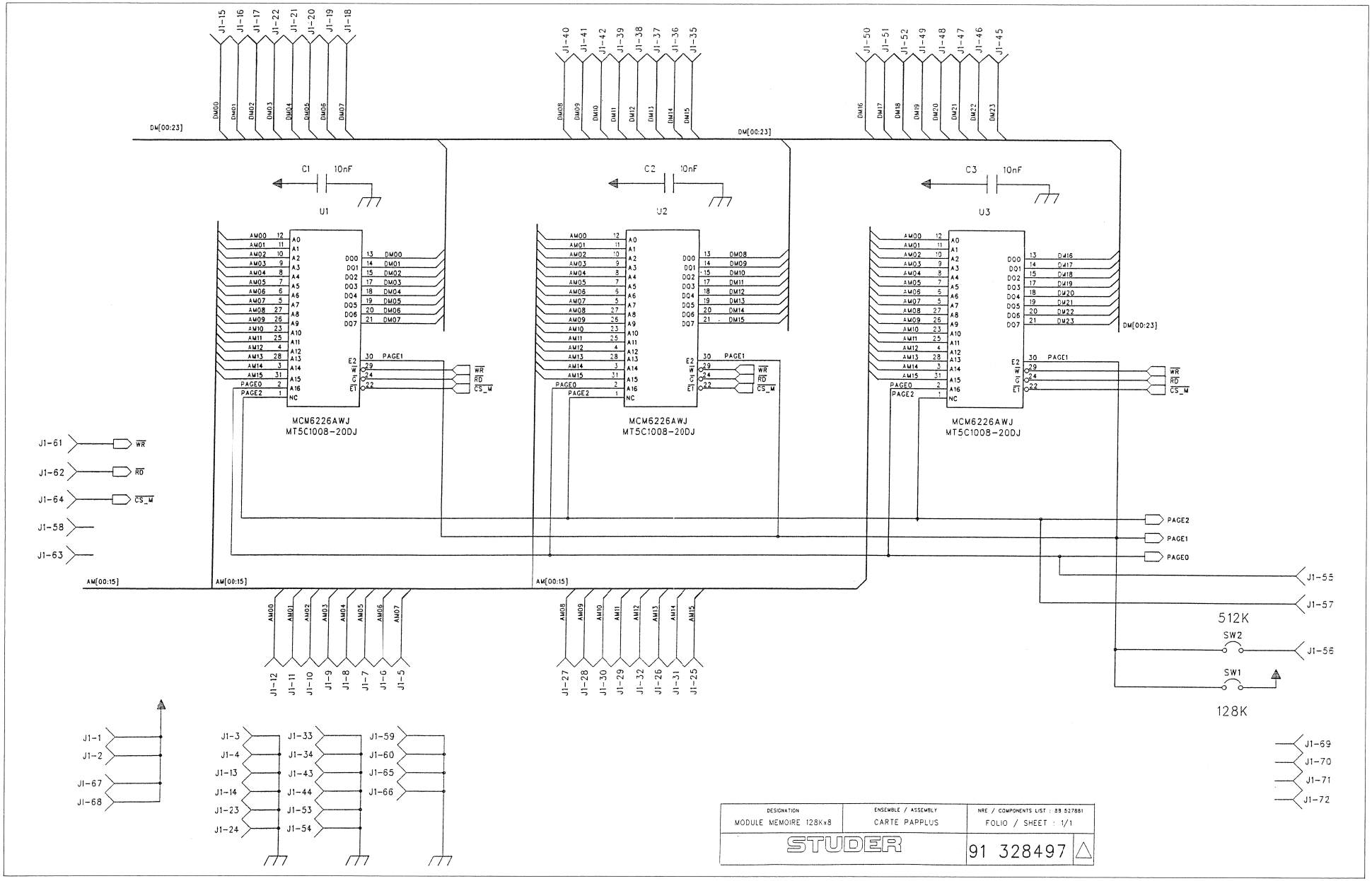

Pap Plus Board Extended Memory 128k x 8 42.355.278.80

MODIF.: IND. Xa=ajout - IND. Xm=modif. ref. et/ou valeur - IND. Xs=suppression

REPERE	IND	COMPOSANT	DESIGNATION	VALEUR	QTE	FABRIQ.	BOITIER
A1		91328497	SCHEMA		1		
A2		91830855	FILM CIRCUIT		1		
A3		30830855	TEST DE CONFORMITE		1		
A4		91830856	FILM DE SERIGRAPHIE		1		
A5		91830857	FILM EPARGNE SOUDURE		1		
A6		91830858	FILM PATE A BRASER		1		
A7		30830858	ECRAN PATE A BRASER		1		
A8		91328498	PLAN DE FABRICATION		1		
A9		30328498	OUTIL DE FABRICATION		1		
A10		91815505	ETIQUETTE REPERE CONNECTEUR ✓		1		
C1		95500020	CONDENSATEUR X7R	10nF 20%	1		0805
C2		95500020	CONDENSATEUR X7R	10nF 20%	1		0805
C3		95500020	CONDENSATEUR X7R	10nF 20%	1		0805
U1		95100190	CIRCUIT INTEGRE	MT5C1008-20DJ	1	MICRON	SOJ32
U2		95100190	CIRCUIT INTEGRE	MT5C1008-20DJ	1	MICRON	SOJ32
U3		95100190	CIRCUIT INTEGRE	MT5C1008-20DJ	1	MICRON	SOJ32

SCHEMATA / CIRCUIT DIAGRAMS

D19 M Rack Bus 5/15 ..... 1.940.592.00

Back Plane 1.940.550.00

Power Supply 5V/20A 1.940.601.00

Power Supply ±15V/3.4A 1.940.602.00

D19M Rack Bus 5/15 1.940.592.00

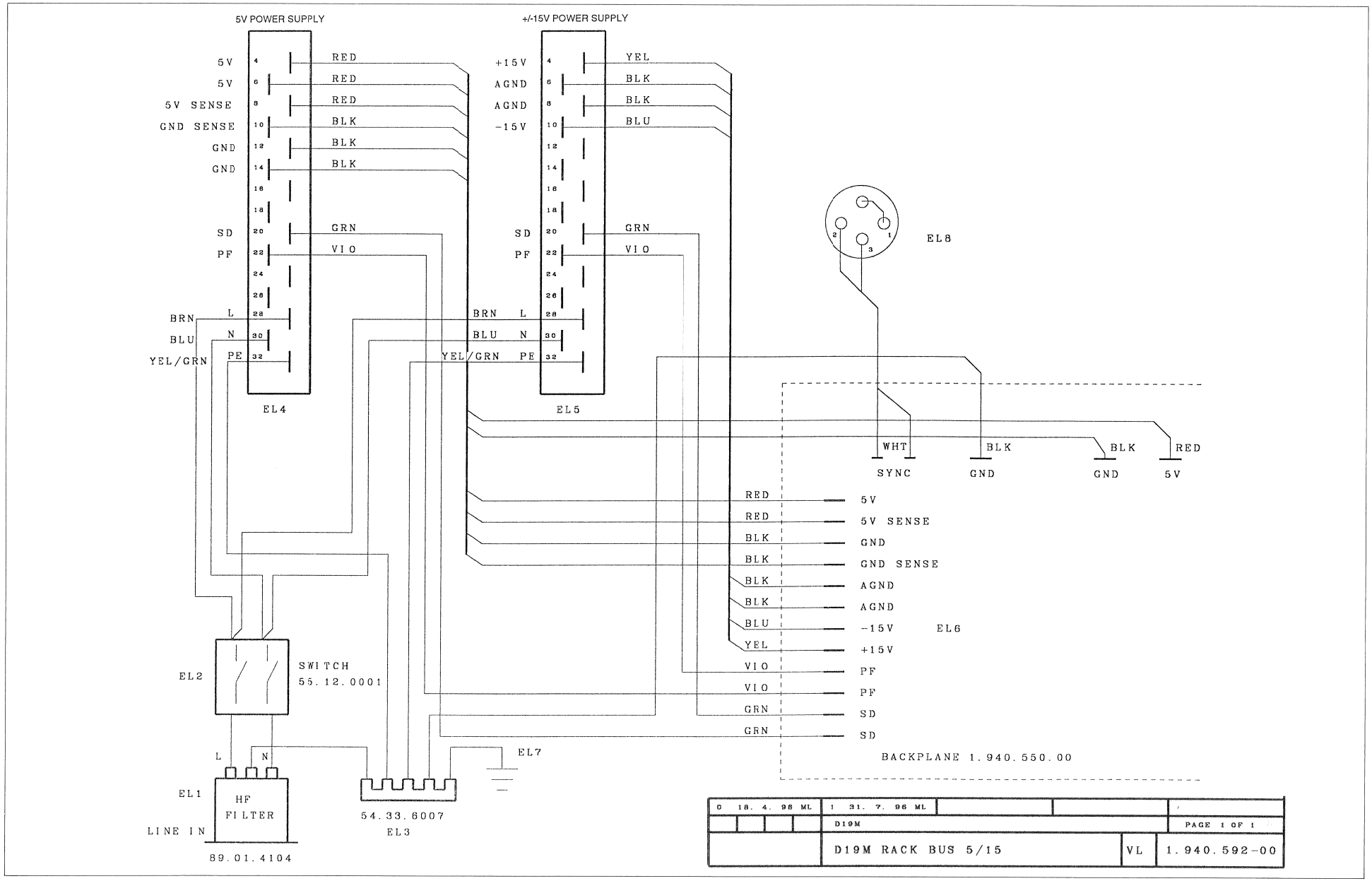

Back Plane 1.940.550.00

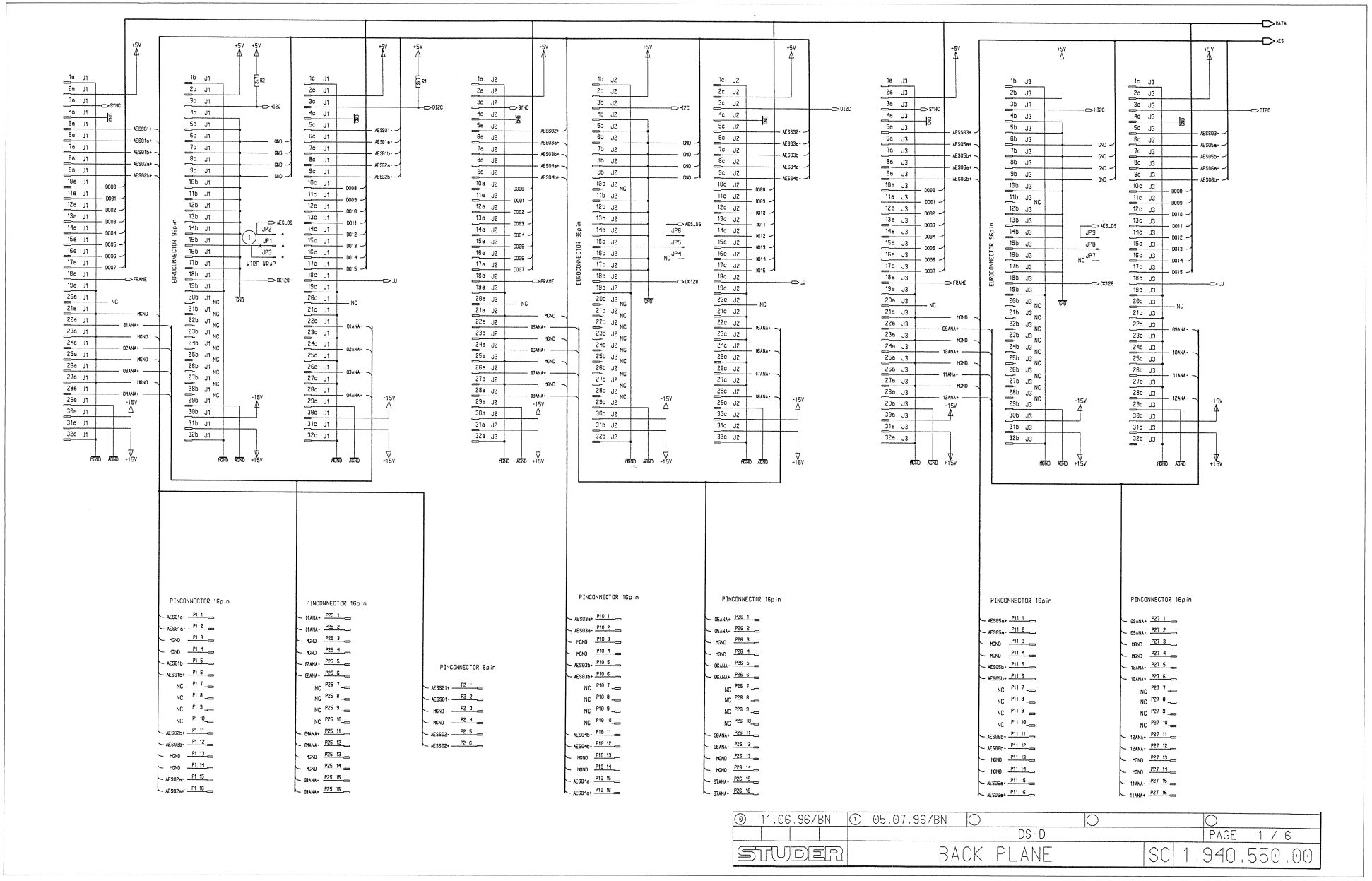

Back Plane 1.940.550.00

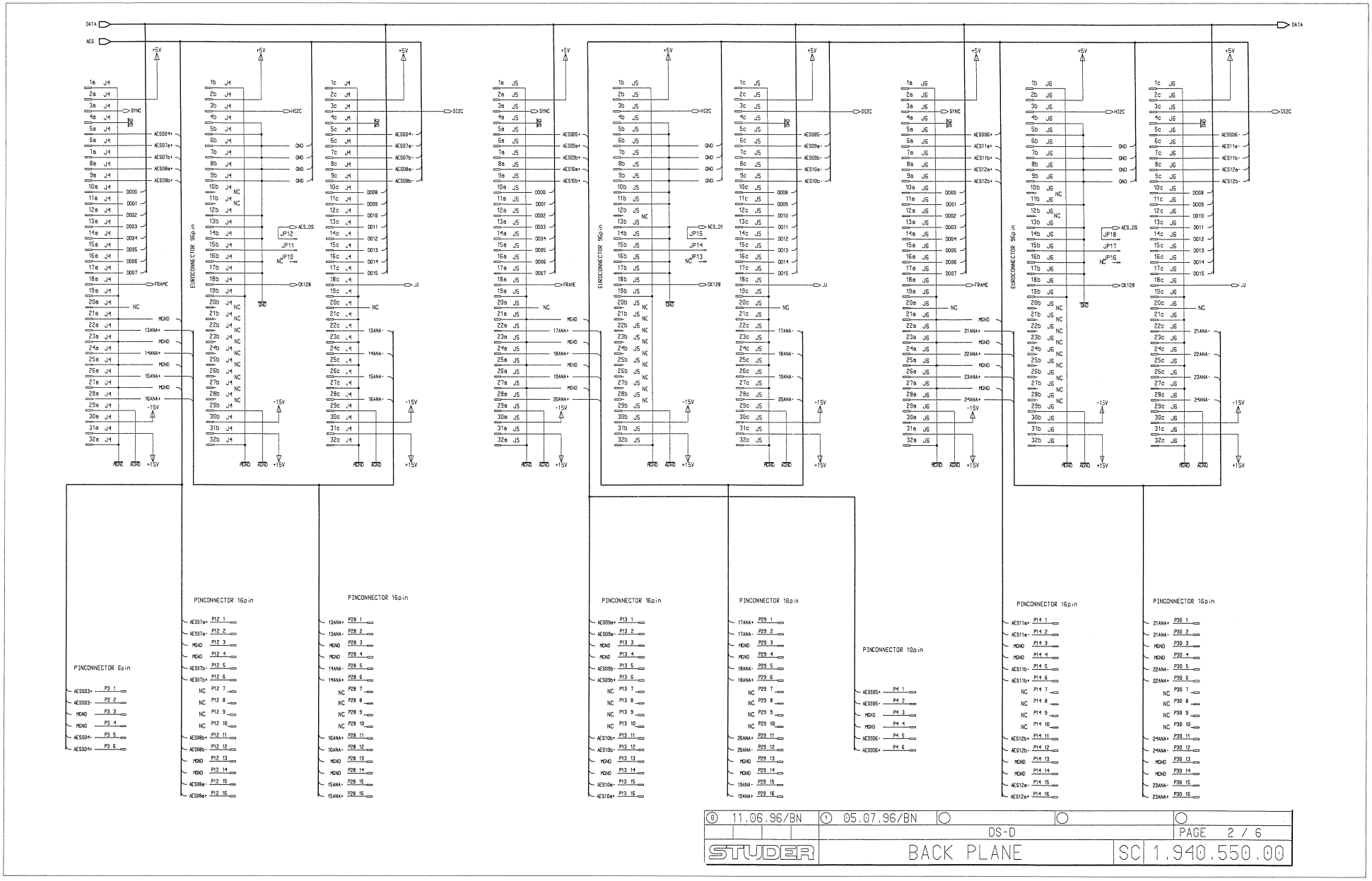

Back Plane 1.940.550.00

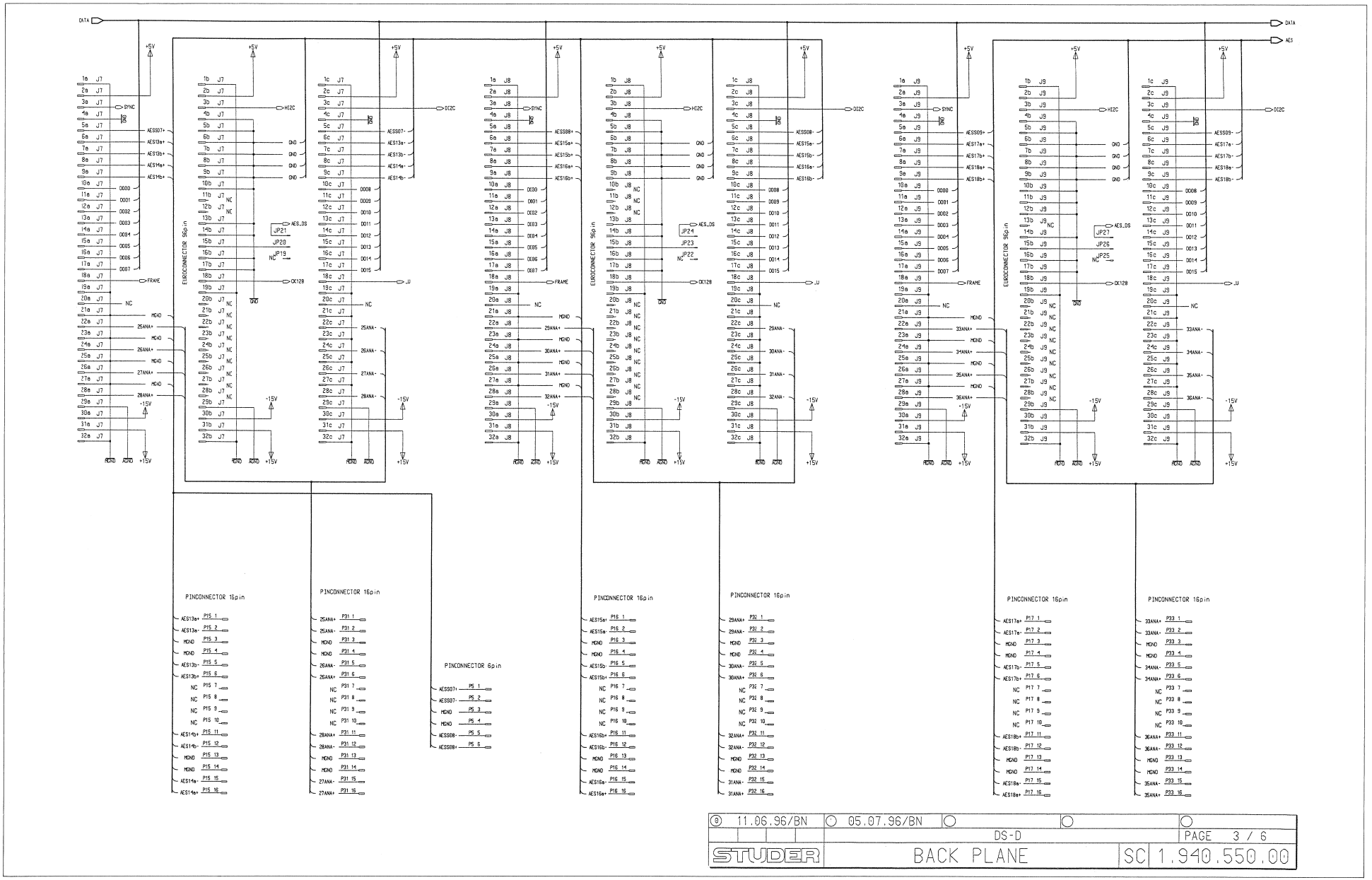

Back Plane 1.940.550.00

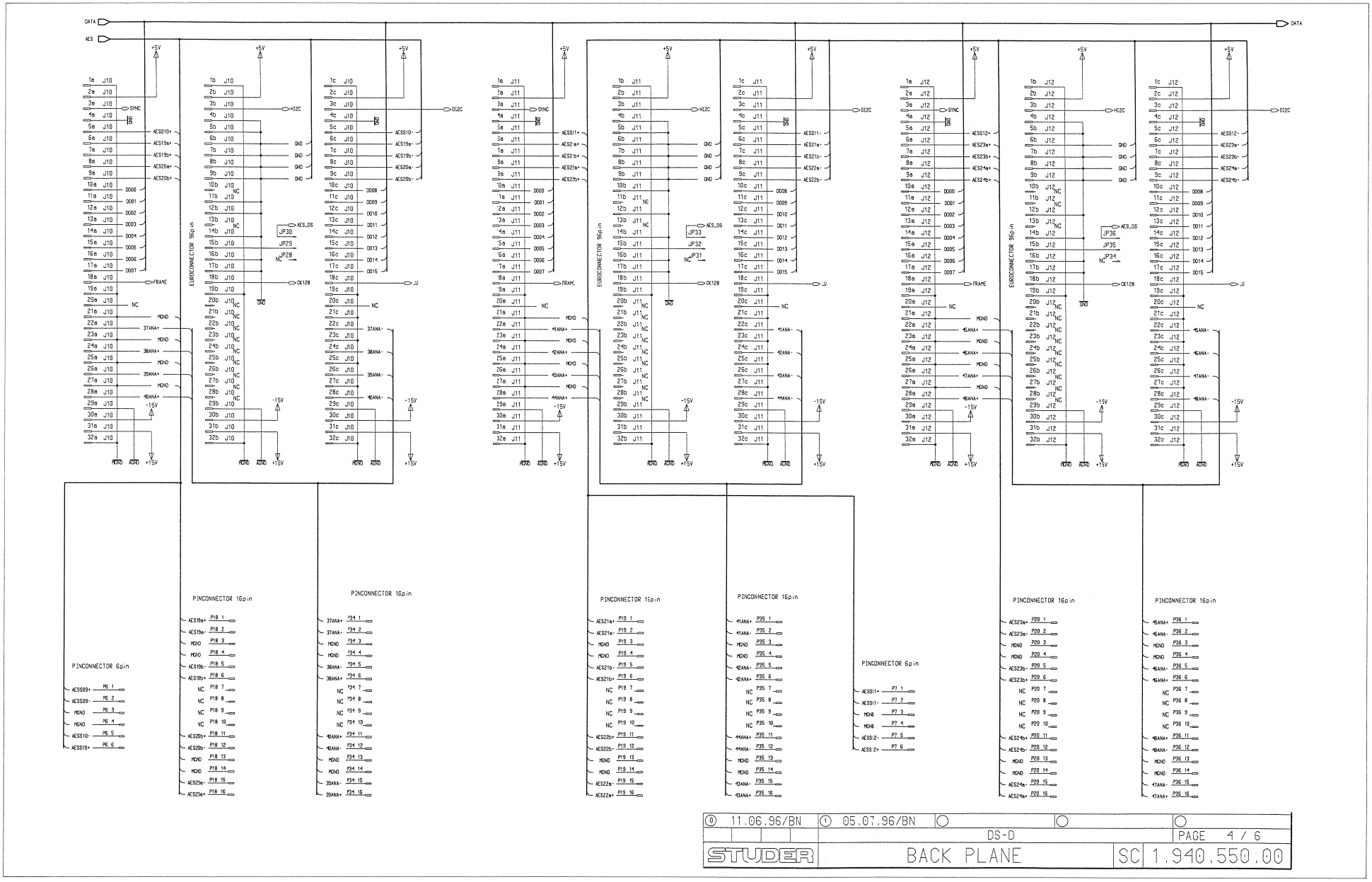

Back Plane 1.940.550.00

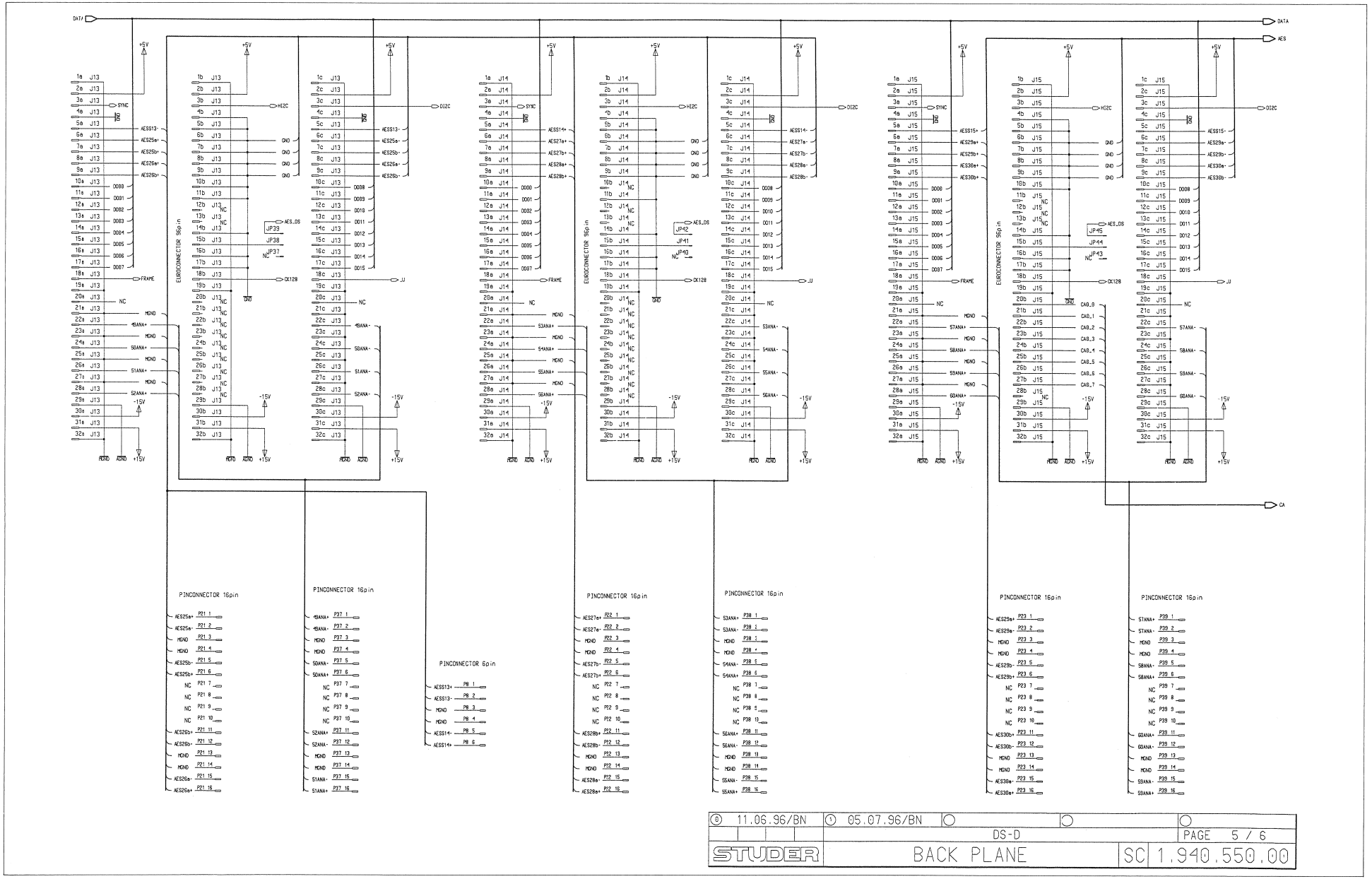

Back Plane 1.940.550.00

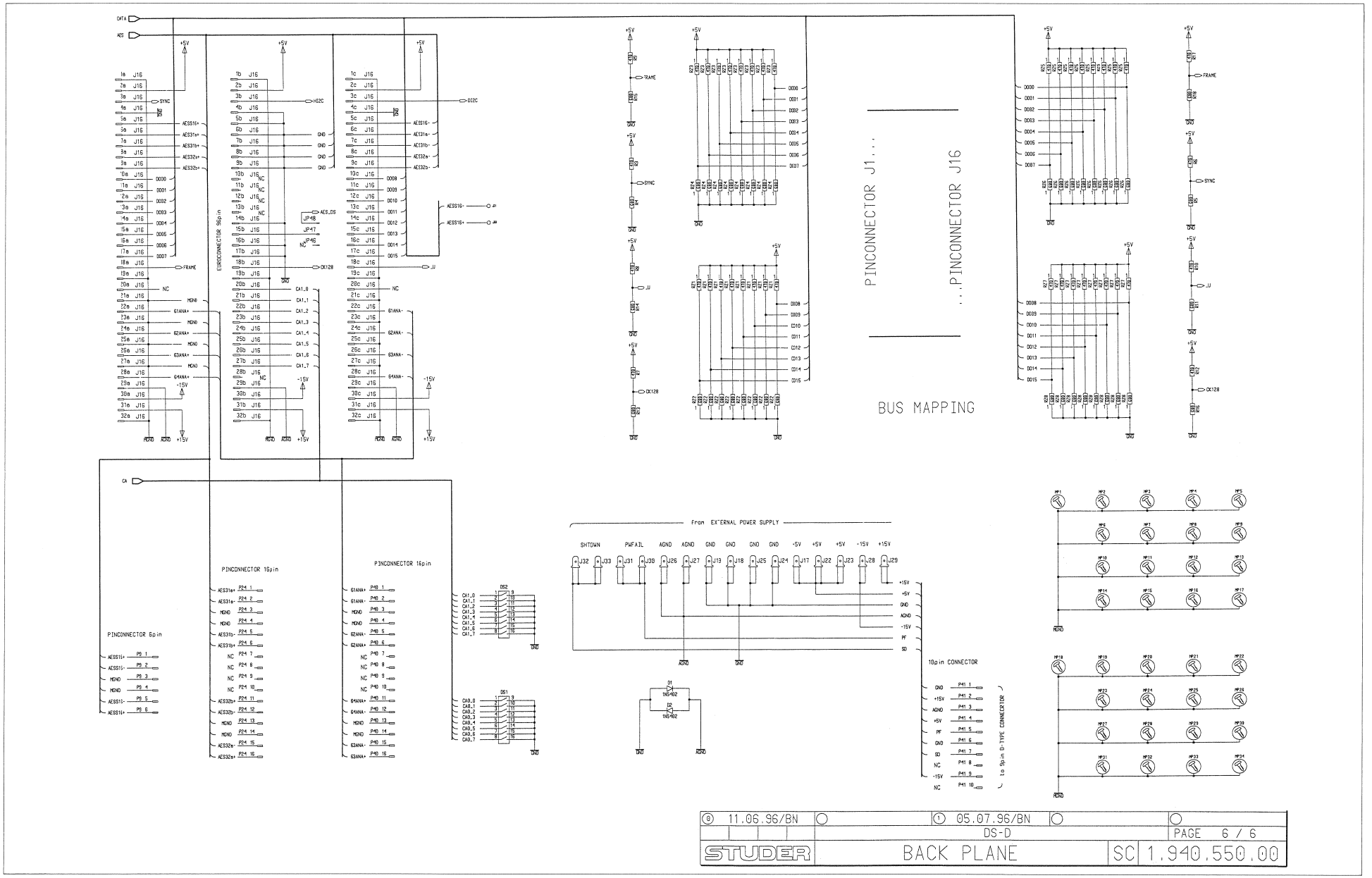

Back Plane 1.940.550.00

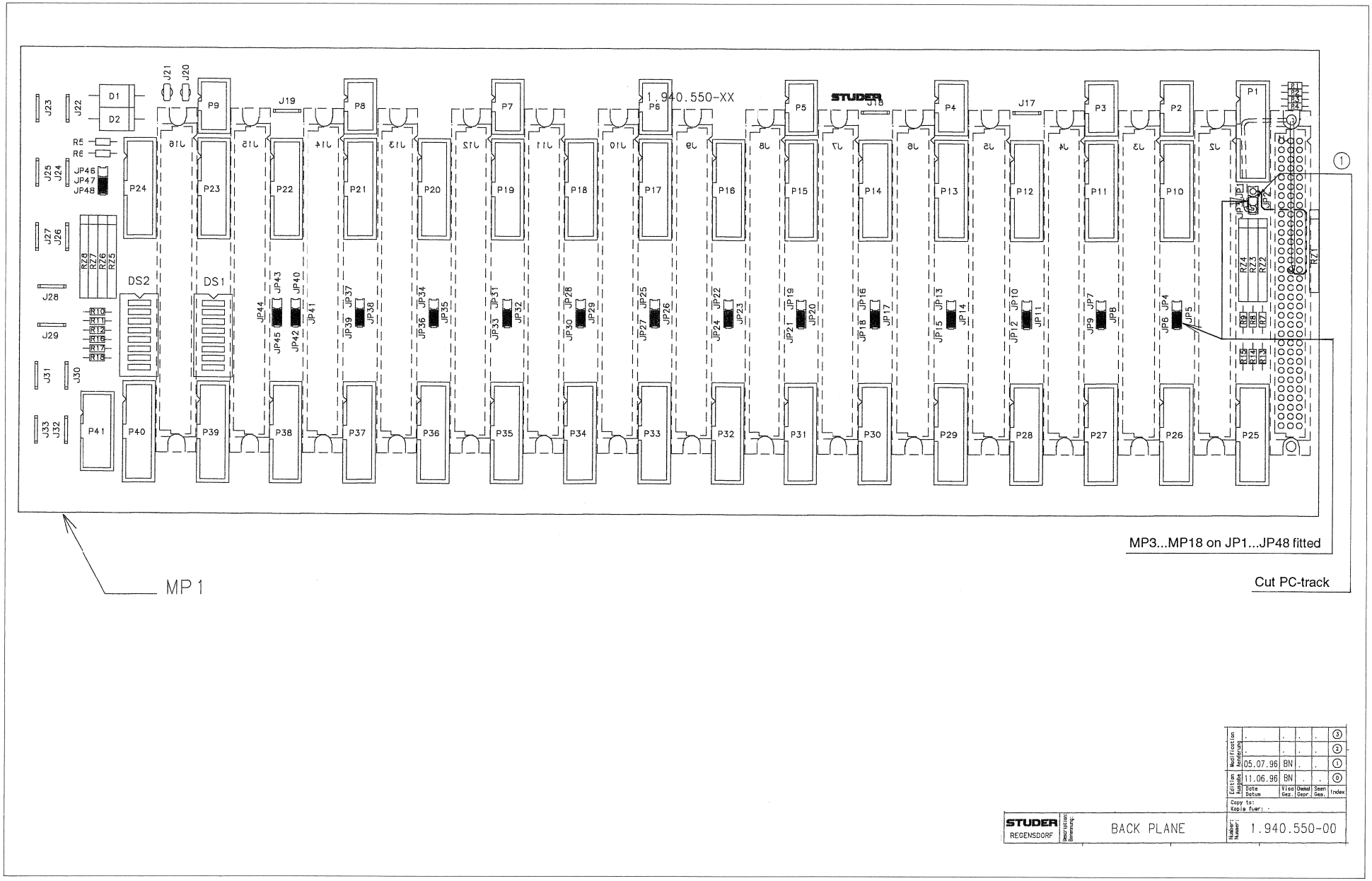

Back Plane 1.940.550.00

Idx.	Pos.	Part No.	Qty.	Type/Val.	Description
0	D 1	50.04.0507		1N5402	D 1 N 5402,
0	D 2	50.04.0507		1N5402	D 1 N 5402,
0	DS 1	55.01.0168		8*a	SZ , 8*A, DIL
0	DS 2	55.01.0168		8*a	SZ , 8*A, DIL
0	J 1	1.940.550.01			MESSERLEISTE 96 pol DIN 41612
0	J 2	1.940.550.01			MESSERLEISTE 96 pol DIN 41612
0	J 3	1.940.550.01			MESSERLEISTE 96 pol DIN 41612
0	J 4	1.940.550.01			MESSERLEISTE 96 pol DIN 41612
0	J 5	1.940.550.01			MESSERLEISTE 96 pol DIN 41612
0	J 6	1.940.550.01			MESSERLEISTE 96 pol DIN 41612
0	J 7	1.940.550.01			MESSERLEISTE 96 pol DIN 41612
0	J 8	1.940.550.01			MESSERLEISTE 96 pol DIN 41612
0	J 9	1.940.550.01			MESSERLEISTE 96 pol DIN 41612
0	J 10	1.940.550.01			MESSERLEISTE 96 pol DIN 41612
0	J 11	1.940.550.01			MESSERLEISTE 96 pol DIN 41612
0	J 12	1.940.550.01			MESSERLEISTE 96 pol DIN 41612
0	J 13	1.940.550.01			MESSERLEISTE 96 pol DIN 41612
0	J 14	1.940.550.01			MESSERLEISTE 96 pol DIN 41612
0	J 15	1.940.550.01			MESSERLEISTE 96 pol DIN 41612
0	J 16	1.940.550.01			MESSERLEISTE 96 pol DIN 41612
0	J 17	54.02.0335		1p	P FLACH, 6.3*0.8, GERADE
0	J 18	54.02.0335		1p	P FLACH, 6.3*0.8, GERADE
0	J 19	54.02.0335		1p	P FLACH, 6.3*0.8, GERADE
0	J 20	54.02.0320		1p	Flatpin, 2.8*0.8mm
0	J 21	54.02.0320		1p	Flatpin, 2.8*0.8mm
0	J 22	54.02.0335		1p	P FLACH, 6.3*0.8, GERADE
0	J 23	54.02.0335		1p	P FLACH, 6.3*0.8, GERADE
0	J 24	54.02.0335		1p	P FLACH, 6.3*0.8, GERADE
0	J 25	54.02.0335		1p	P FLACH, 6.3*0.8, GERADE
0	J 26	54.02.0335		1p	P FLACH, 6.3*0.8, GERADE
0	J 27	54.02.0335		1p	P FLACH, 6.3*0.8, GERADE
0	J 28	54.02.0335		1p	P FLACH, 6.3*0.8, GERADE
0	J 29	54.02.0335		1p	P FLACH, 6.3*0.8, GERADE
0	J 30	54.02.0335		1p	P FLACH, 6.3*0.8, GERADE
0	J 31	54.02.0335		1p	P FLACH, 6.3*0.8, GERADE
0	J 32	54.02.0335		1p	P FLACH, 6.3*0.8, GERADE
0	J 33	54.02.0335		1p	P FLACH, 6.3*0.8, GERADE
0	JP 1	54.01.0020		1-P	P STIFT .63*.63, H=5.8/3.4
0	JP 2	54.01.0020		1-P	P STIFT .63*.63, H=5.8/3.4
0	JP 3	54.01.0020		1-P	P STIFT .63*.63, H=5.8/3.4
0	JP 4	54.01.0020		1-P	P STIFT .63*.63, H=5.8/3.4
0	JP 5	54.01.0020		1-P	P STIFT .63*.63, H=5.8/3.4
0	JP 6	54.01.0020		1-P	P STIFT .63*.63, H=5.8/3.4
0	JP 7	54.01.0020		1-P	P STIFT .63*.63, H=5.8/3.4
0	JP 8	54.01.0020		1-P	P STIFT .63*.63, H=5.8/3.4
0	JP 9	54.01.0020		1-P	P STIFT .63*.63, H=5.8/3.4
0	JP 10	54.01.0020		1-P	P STIFT .63*.63, H=5.8/3.4
0	JP 11	54.01.0020		1-P	P STIFT .63*.63, H=5.8/3.4
0	JP 12	54.01.0020		1-P	P STIFT .63*.63, H=5.8/3.4
0	JP 13	54.01.0020		1-P	P STIFT .63*.63, H=5.8/3.4
0	JP 14	54.01.0020		1-P	P STIFT .63*.63, H=5.8/3.4
0	JP 15	54.01.0020		1-P	P STIFT .63*.63, H=5.8/3.4
0	JP 16	54.01.0020		1-P	P STIFT .63*.63, H=5.8/3.4
0	JP 17	54.01.0020		1-P	P STIFT .63*.63, H=5.8/3.4
0	JP 18	54.01.0020		1-P	P STIFT .63*.63, H=5.8/3.4
0	JP 19	54.01.0020		1-P	P STIFT .63*.63, H=5.8/3.4
0	JP 20	54.01.0020		1-P	P STIFT .63*.63, H=5.8/3.4
0	JP 21	54.01.0020		1-P	P STIFT .63*.63, H=5.8/3.4
0	JP 22	54.01.0020		1-P	P STIFT .63*.63, H=5.8/3.4
0	JP 23	54.01.0020		1-P	P STIFT .63*.63, H=5.8/3.4
0	JP 24	54.01.0020		1-P	P STIFT .63*.63, H=5.8/3.4
0	JP 25	54.01.0020		1-P	P STIFT .63*.63, H=5.8/3.4
0	JP 26	54.01.0020		1-P	P STIFT .63*.63, H=5.8/3.4
0	JP 27	54.01.0020		1-P	P STIFT .63*.63, H=5.8/3.4
0	JP 28	54.01.0020		1-P	P STIFT .63*.63, H=5.8/3.4
0	JP 29	54.01.0020		1-P	P STIFT .63*.63, H=5.8/3.4
0	JP 30	54.01.0020		1-P	P STIFT .63*.63, H=5.8/3.4
0	JP 31	54.01.0020		1-P	P STIFT .63*.63, H=5.8/3.4
0	JP 32	54.01.0020		1-P	P STIFT .63*.63, H=5.8/3.4
0	JP 33	54.01.0020		1-P	P STIFT .63*.63, H=5.8/3.4
0	JP 34	54.01.0020		1-P	P STIFT .63*.63, H=5.8/3.4
0	JP 35	54.01.0020		1-P	P STIFT .63*.63, H=5.8/3.4
0	JP 36	54.01.0020		1-P	P STIFT .63*.63, H=5.8/3.4
0	JP 37	54.01.0020		1-P	P STIFT .63*.63, H=5.8/3.4
0	JP 38	54.01.0020		1-P	P STIFT .63*.63, H=5.8/3.4
0	JP 39	54.01.0020		1-P	P STIFT .63*.63, H=5.8/3.4
0	JP 40	54.01.0020		1-P	P STIFT .63*.63, H=5.8/3.4
0	JP 41	54.01.0020		1-P	P STIFT .63*.63, H=5.8/3.4
0	JP 42	54.01.0020		1-P	P STIFT .63*.63, H=5.8/3.4
0	JP 43	54.01.0020		1-P	P STIFT .63*.63, H=5.8/3.4
0	JP 44	54.01.0020		1-P	P STIFT .63*.63, H=5.8/3.4
0	JP 45	54.01.0020		1-P	P STIFT .63*.63, H=5.8/3.4
0	JP 46	54.01.0020		1-P	P STIFT .63*.63, H=5.8/3.4
0	JP 47	54.01.0020.		1-P	P STIFT .63*.63, H=5.8/3.4
0	JP 48	54.01.0020		1-P	P STIFT .63*.63, H=5.8/3.4
0	MP 1	1.940.550.11			BACK PLANE PCB
0	MP 2	1.940.550.04			NR. ETIKETTE 5 * 20
0	MP 3	54.01.0021		Jumper	0.63 * 0.63mm
0	MP 4	54.01.0021		Jumper	0.63 * 0.63mm
0	MP 5	54.01.0021		Jumper	0.63 * 0.63mm
0	MP 6	54.01.0021		Jumper	0.63 * 0.63mm
0	MP 7	54.01.0021		Jumper	0.63 * 0.63mm
0	MP 8	54.01.0021		Jumper	0.63 * 0.63mm
0	MP 9	54.01.0021		Jumper	0.63 * 0.63mm
0	MP 10	54.01.0021		Jumper	0.63 * 0.63mm
0	MP 11	54.01.0021		Jumper	0.63 * 0.63mm
0	MP 12	54.01.0021		Jumper	0.63 * 0.63mm
0	MP 13	54.01.0021		Jumper	0.63 * 0.63mm
0	MP 14	54.01.0021		Jumper	0.63 * 0.63mm
0	MP 15	54.01.0021		Jumper	0.63 * 0.63mm
0	MP 16	54.01.0021		Jumper	0.63 * 0.63mm
0	MP 17	54.01.0021		Jumper	0.63 * 0.63mm
0	MP 18	54.01.0021		Jumper	0.63 * 0.63mm
1	P 1	54.14.2142		16p	1/20" Au, gerade, o Verr, 4mm
0	P 2	not used		6p	1/20" Au, gerade, ohne Verrieg
0	P 3	not used		6p	1/20" Au, gerade, ohne Verrieg
0	P 4	not used		6p	1/20" Au, gerade, ohne Verrieg
0	P 5	not used		6p	1/20" Au, gerade, ohne Verrieg
0	P 6	not used		6p	1/20" Au, gerade, ohne Verrieg
0	P 7	not used		6p	1/20" Au, gerade, ohne Verrieg
0	P 8	not used		6p	1/20" Au, gerade, ohne Verrieg
0	P 9	not used		6p	1/20" Au, gerade, ohne Verrieg
1	P 10	54.14.2142		16p	1/20" Au, gerade, o Verr, 4mm
1	P 11	54.14.2142		16p	1/20" Au, gerade, o Verr, 4mm
1	P 12	54.14.2142		16p	1/20" Au, gerade, o Verr, 4mm
1	P 13	54.14.2142		16p	1/20" Au, gerade, o Verr, 4mm
1	P 14	54.14.2142		16p	1/20" Au, gerade, o Verr, 4mm
1	P 15	54.14.2142		16p	1/20" Au, gerade, o Verr, 4mm
1	P 16	54.14.2142		16p	1/20" Au, gerade, o Verr, 4mm
1	P 17	54.14.2142		16p	1/20" Au, gerade, o Verr, 4mm
1	P 18	54.14.2142		16p	1/20" Au, gerade, o Verr, 4mm
1	P 19	54.14.2142		16p	1/20" Au, gerade, o Verr, 4mm
1	P 20	54.14.2142		16p	1/20" Au, gerade, o Verr, 4mm
1	P 21	54.14.2142		16p	1/20" Au, gerade, o Verr, 4mm
1	P 22	54.14.2142		16p	1/20" Au, gerade, o Verr, 4mm
1	P 23	54.14.2142		16p	1/20" Au, gerade, o Verr, 4mm
1	P 24	54.14.2142		16p	1/20" Au, gerade, o Verr, 4mm
1	P 25	54.14.2142		16p	1/20" Au, gerade, o Verr, 4mm
1	P 26	54.14.2142		16p	1/20" Au, gerade, o Verr, 4mm
1	P 27	54.14.2142		16p	1/20" Au, gerade, o Verr, 4mm
1	P 28	54.14.2142		16p	1/20" Au, gerade, o Verr, 4mm
1	P 29	54.14.2142		16p	1/20" Au, gerade, o Verr, 4mm
1	P 30	54.14.2142		16p	1/20" Au, gerade, o Verr, 4mm
1	P 31	54.14.2142		16p	1/20" Au, gerade, o Verr, 4mm
1	P 32	54.14.2142		16p	1/20" Au, gerade, o Verr, 4mm
1	P 33	54.14.2142		16p	1/20" Au, gerade, o Verr, 4mm
1	P 34	54.14.2142		16p	1/20" Au, gerade, o Verr, 4mm
1	P 35	54.14.2142		16p	1/20" Au, gerade, o Verr, 4mm
1	P 36	54.14.2142		16p	1/20" Au, gerade, o Verr, 4mm
1	P 37	54.14.2142		16p	1/20" Au, gerade, o Verr, 4mm
1	P 38	54.14.2142		16p	1/20" Au, gerade, o Verr, 4mm
1	P 39	54.14.2142		16p	1/20" Au, gerade, o Verr, 4mm
1	P 40	54.14.2142		16p	1/20" Au, gerade, o Verr, 4mm
1	P 41	54.14.2141		10p	1/20" Au, gerade, o Verr, 4mm
0	R 1	57.10.1272		2k7	MF, 1%, 0204
0	R 2	57.10.1272		2k7	MF, 1%, 0204
0	R 3	57.10.1471		470R	MF, 1%, 0204
0	R 4	57.10.1681		680R	MF, 1%, 0204
0	R 5	57.10.1681		680R	MF, 1%, 0204
0	R 6	57.10.1471		470R	MF, 1%, 0204
0	R 7	57.10.1471		470R	MF, 1%, 0204
0	R 8	57.10.1471		470R	MF, 1%, 0204
0	R 9	57.10.1471		470R	MF, 1%, 0204
0	R 10	57.10.1471		470R	MF, 1%, 0204
0	R 11	57.10.1681		680R	MF, 1%, 0204
0	R 12	57.10.1471		470R	MF, 1%, 0204
0	R 13	57.10.1681		680R	MF, 1%, 0204
0	R 14	57.10.1681		680R	MF, 1%, 0204
0	R 15	57.10.1681		680R	MF, 1%, 0204
0	R 16	57.10.1681		680R	MF, 1%, 0204
0	R 17	57.10.1471		470R	MF, 1%, 0204
0	R 18	57.10.1681		680R	MF, 1%, 0204
0	RZ 1	57.88.4471		470.	RZ 8 * 470 , 2%, SIP 9
0	RZ 2	57.88.4681		680.	RZ 8 * 680 , 2%, SIP 9
0	RZ 3	57.88.4471		470.	RZ 8 * 470 , 2%, SIP 9
0	RZ 4	57.88.4681		680.	RZ 8 * 680 , 2%, SIP 9
0	RZ 5	57.88.4471		470.	RZ 8 * 470 , 2%, SIP 9
0	RZ 6	57.88.4681		680.	RZ 8 * 680 , 2%, SIP 9
0	RZ 7	57.88.4471		470.	RZ 8 * 470 , 2%, SIP 9
0	RZ 8	57.88.4681		680.	RZ 8 * 680 , 2%, SIP 9

End of List

Comments

Plugs with longer solder pins requested, wire added.

7 POWER SUPPLY UNITS

General For the power supply of the D940/D941 mixing consoles, Coutant 19" units (HSU series) are used which are equipped with a Studer front panel.

Studer Part No.	Description	Basic Coutant product
1.940.601.00	Power Supply 5 V/20 A	HSU-100-10
1.940.602.00	Power Supply ±15 V/3.4 A	HSU-100-23
1.940.603.00	Power Supply 24 V/4.2 A	HSU-100-13

Important As the power supply units are safety-relevant parts, they may be serviced only by authorized personnel using original spare parts.
For replacement, contact your nearest Studer representative; for repair, contact the nearest Coutant distributor. The Coutant brand is represented worldwide by companies with the following names:
Coutant, Coutant-Lambda, Lambda-Coutant, Lambda electronics, Nemic-Lambda, or CL electronics.

7.1 Specifications

Mains voltages: 230 V (200...240 V ±10%)
115 V (100...120 V ±10%)

Voltage selector: Jumper below cover

Mains frequency: 47...440 Hz

Efficiency: typ. 75%

Output power: 100 W total

Output(s): short-circuit protected, main output(s) overload protected (110%)

Power down (logic inhibit): Control input, TTL compatible, active high (5 V/1.6 mA)

Power fail: Output, open collector, TTL compatible, active low (max. 30 V/16 mA) (see diagram below).

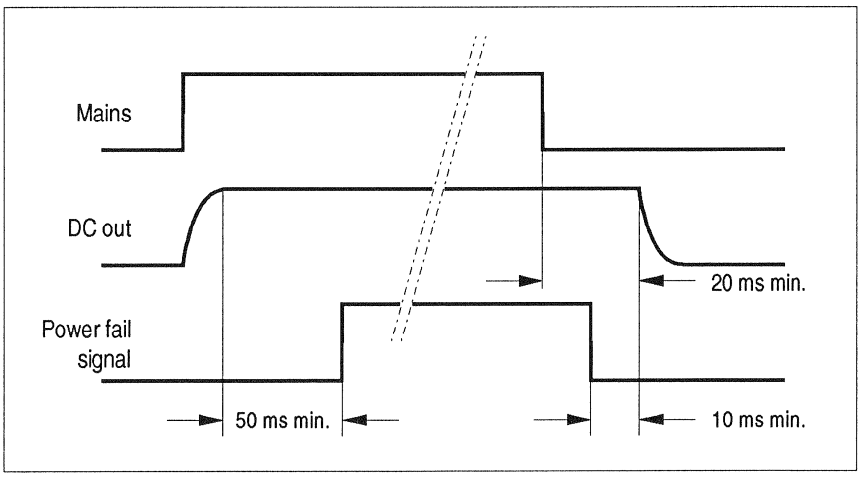

Dimensions: (in mm)

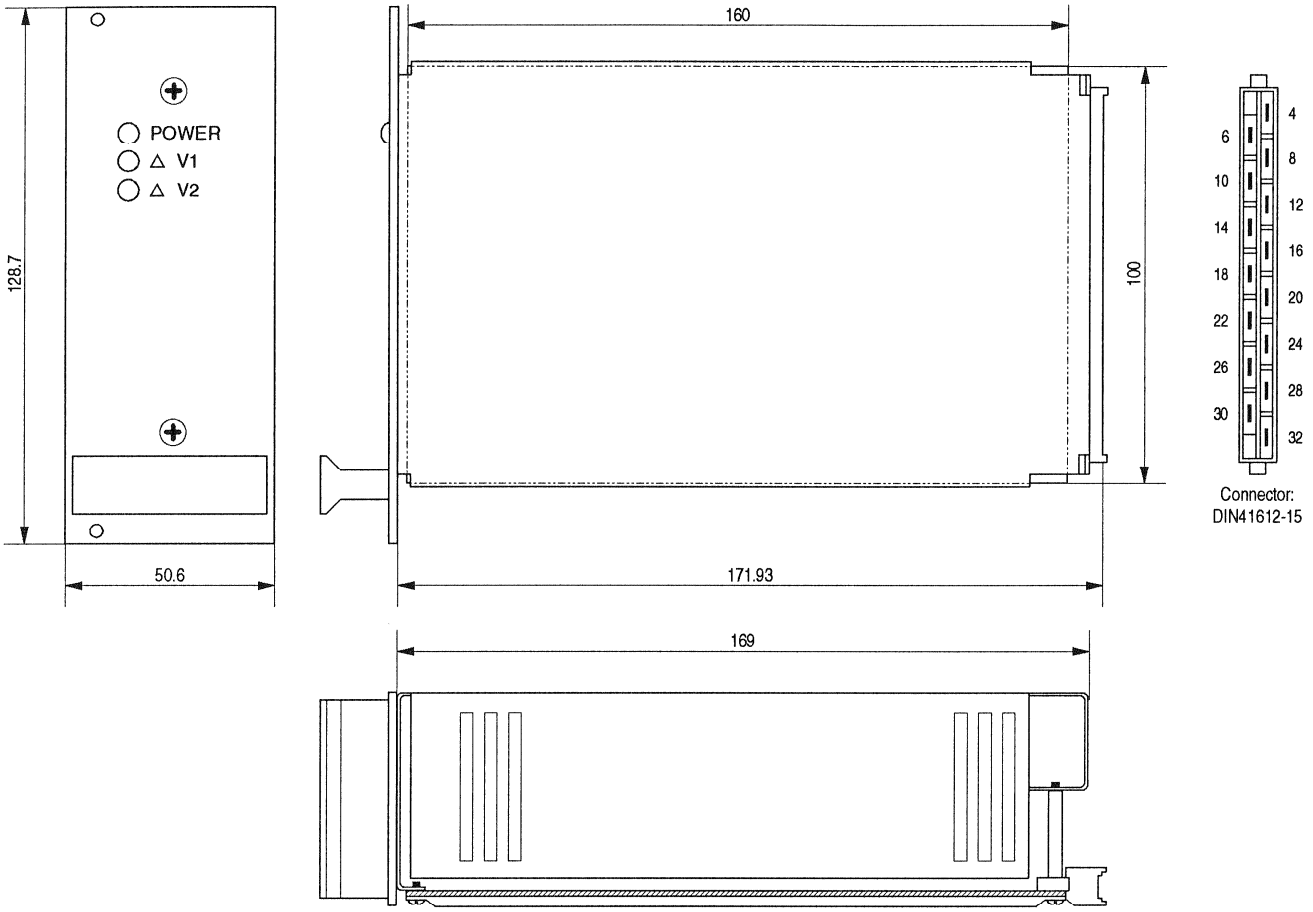

Pin assignment:

Pin	Single output	Twin output
4	V1 +	V1 +
6	V1 +	V1 GND
8	Sense +	V2 –
10	Sense GND	V2 GND
12	V1 GND	
14	V1 GND	
16		
18		
20	Logic inhibit	Logic inhibit
22	Power fail	Power fail
24		
26		
28	AC live	AC live
30	AC neutral	AC neutral
32	Safety GND	Safety GND

SCHEMATA / CIRCUIT DIAGRAMS

Block Diagram D19 M Mado Coaxial 1.940.520.21
Block Diagram Mado Optical 1.940.530.21

D19 M Mado Coaxial 1.940.520.21

Mado Optical 1.940.530.21

Block Diagram D19 M SFC Board 1.940.540

D19 M SFC Board 1.940.540.22

D19 M 24 Bit AD Board 1.940.562.20

D19 M 24 Bit AD/ND Board 1.940.563.20

D19 M AESI Board 1.940.580.20

Block Diagram
D19M Mado Coaxial 1.940.520.21
Mado Optical 1.940.530.21

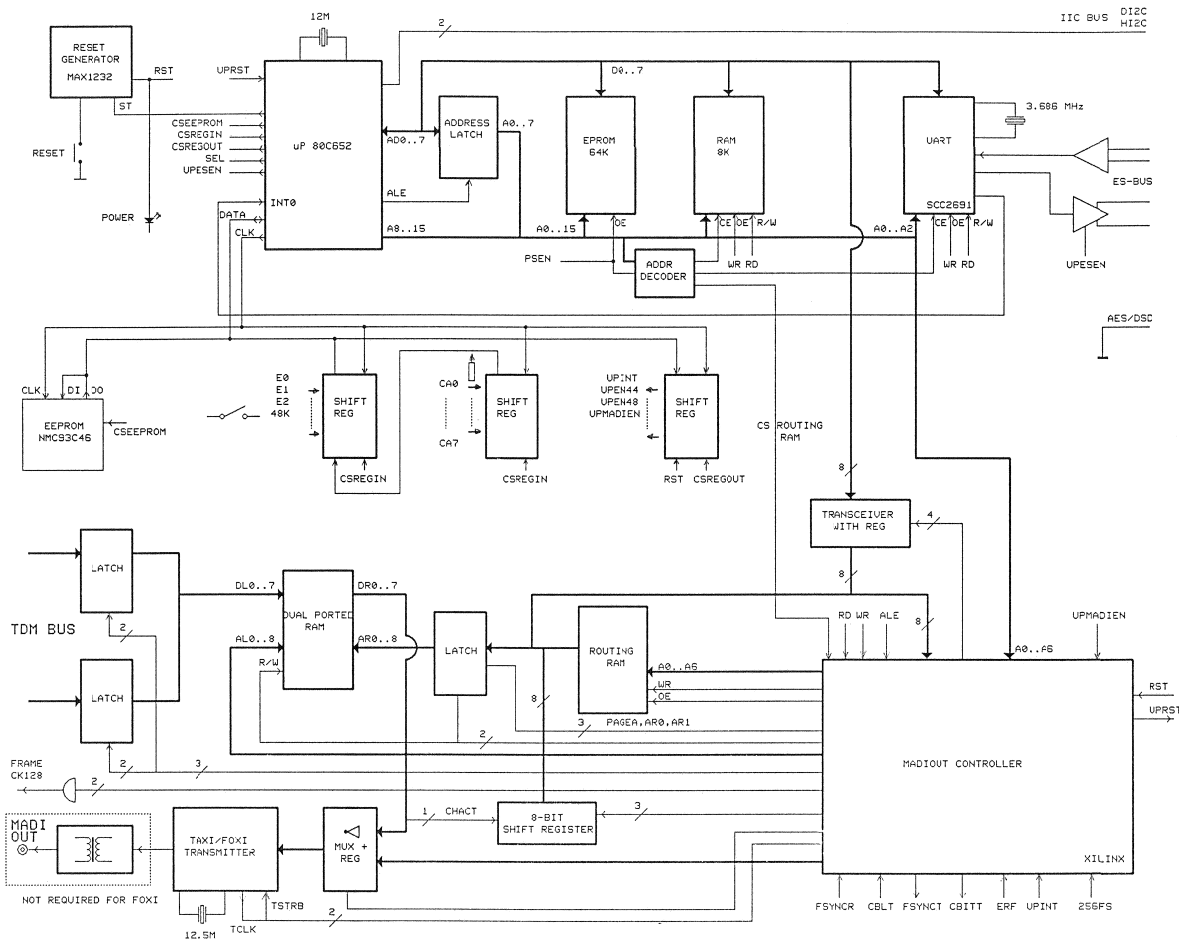

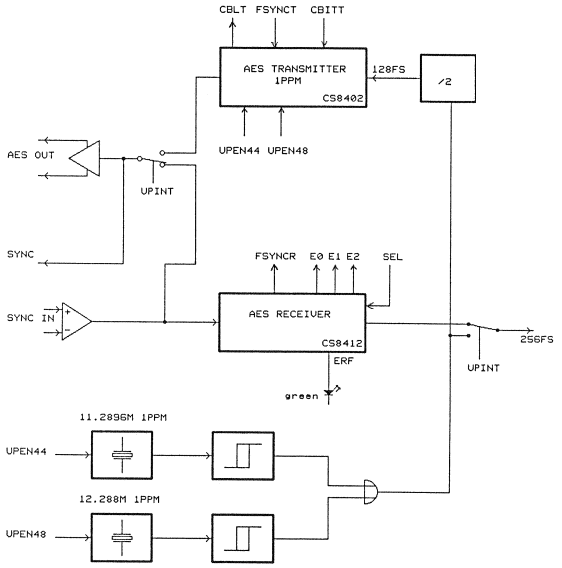

1.940.530.21

23.09.92 ML				
D19M			PAGE 1 OF 2	
STUDER	D19M MADI OUT		SC	1.940.520.21

23.09.92 ML				
D19M			PAGE 2 OF 2	
STUDER	D19M MADI OUT		SC	1.940.520.21

D19M Mado Coaxial 1.940.520.21
Mado Optical 1.940.530.21

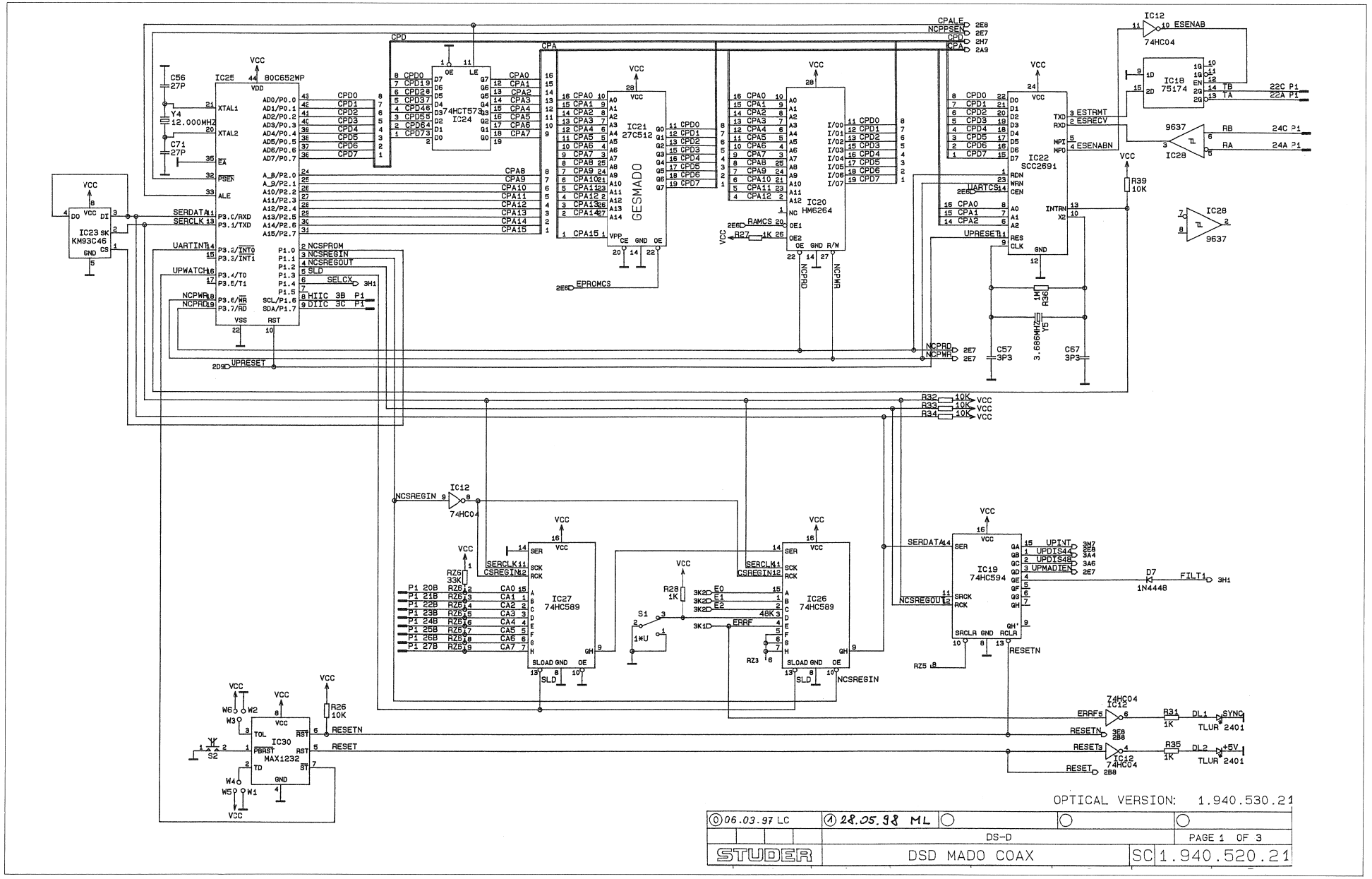

OPTICAL VERSION: 1.940.530.21

⓪ 06.03.97 LC	① 28.05.98 ML		
	DS-D		PAGE 1 OF 3
STUDER	DSD MADO COAX	SC	1.940.520.21

D19M Mado Coaxial 1.940.520.21
Mado Optical 1.940.530.21

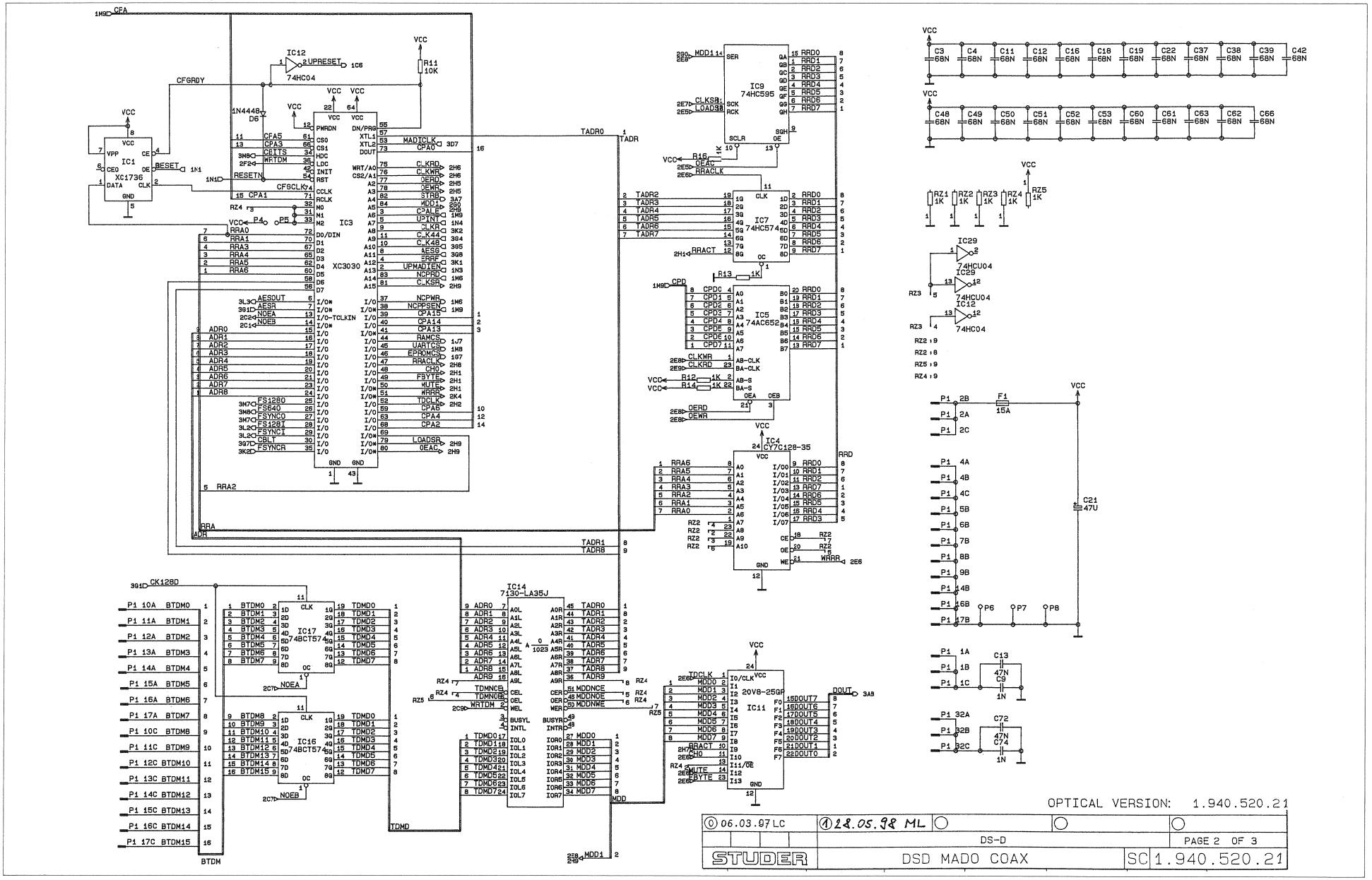

D19M Mado Coaxial 1.940.520.21
Mado Optical 1.940.530.21

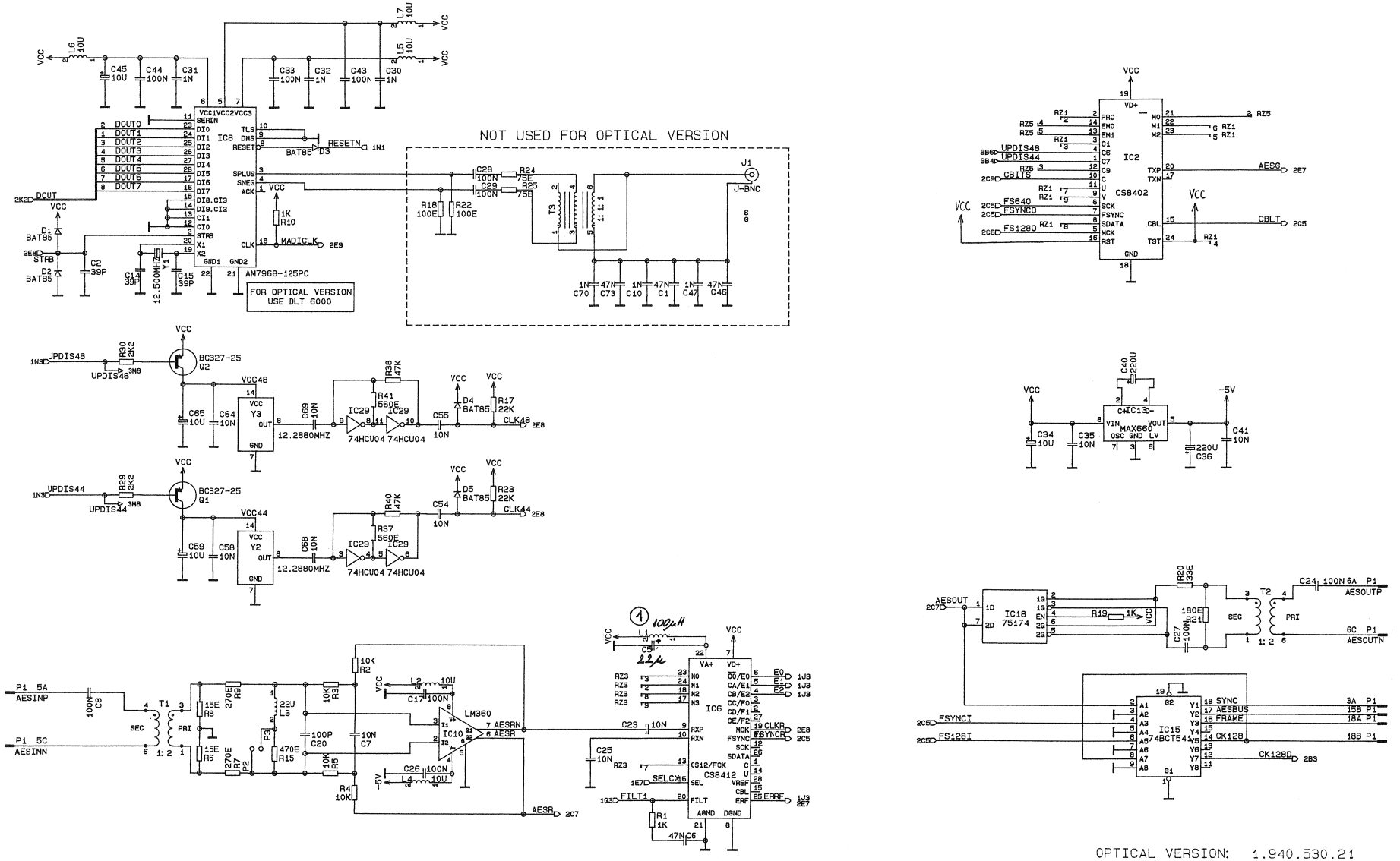

D19M Mado Coaxial 1.940.520.21

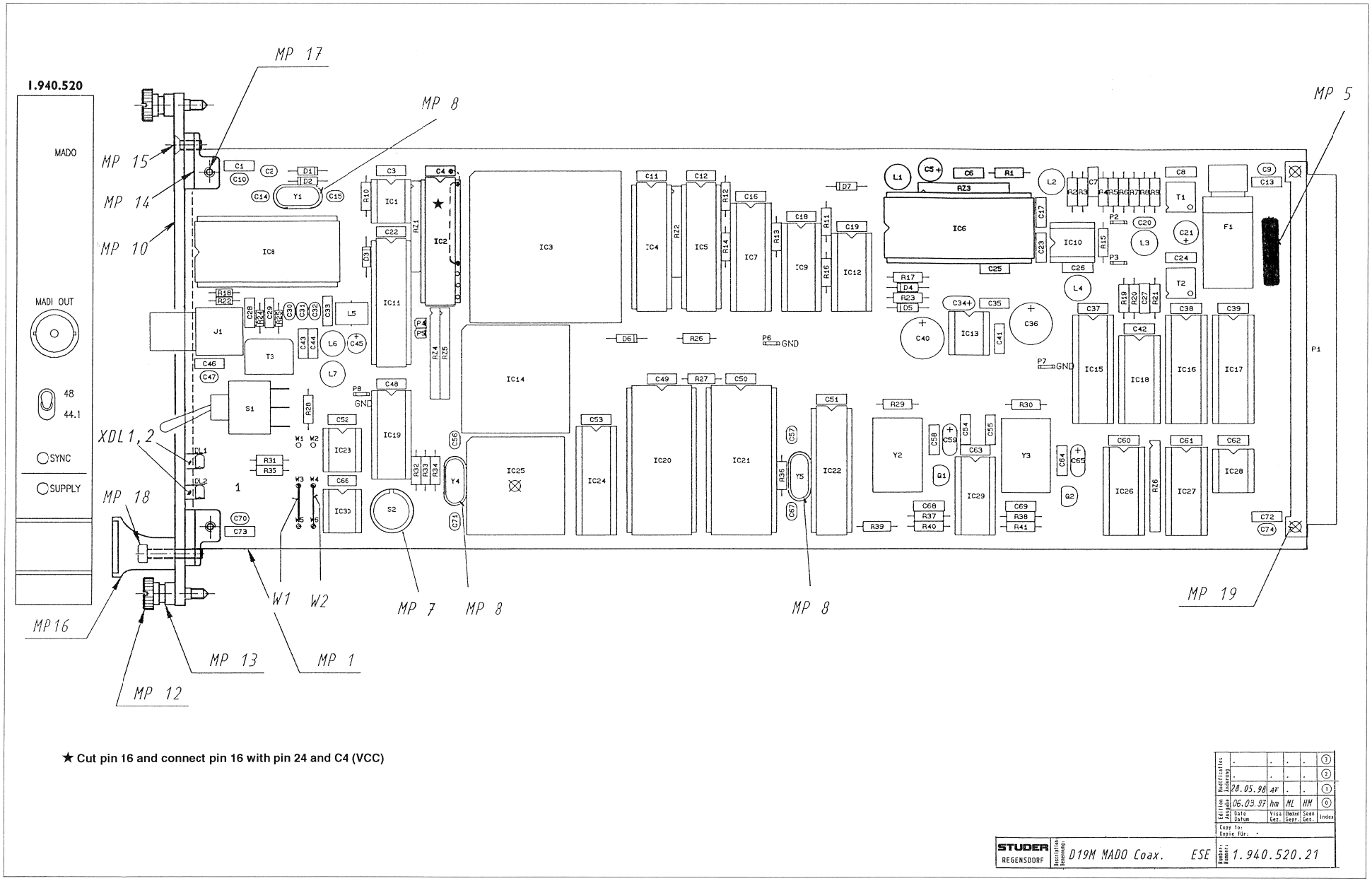

D19M Mado Coaxial 1.940.520.21

Idx.	Pos.	Part No.	Qty.	Type/Val.	Description
0	C 1	59.06.0473		47n	PETP, 63V, 10%, RM5
0	C 2	59.34.2390		39p	CER 63V, 5%, N150
0	C 3	59.06.0683		68n	PETP, 63V, 10%, RM5
0	C 4	59.06.0683		68n	PETP, 63V, 10%, RM5
1	C 5	59.22.5220		22u	EL 25V, 20%, RM5
0	C 6	59.06.0473		47n	PETP, 63V, 10%, RM5
0	C 7	59.06.0103		10n	PETP, 63V, 10%, RM5
0	C 8	59.06.0104		100n	PETP, 63V, 10%, RM5
0	C 9	59.32.4102		1n	C 1000 P , 20%, 50V , CER
0	C 10	59.32.4102		1n	C 1000 P , 20%, 50V , CER
0	C 11	59.06.0683		68n	PETP, 63V, 10%, RM5
0	C 12	59.06.0683		68n	PETP, 63V, 10%, RM5
0	C 13	59.06.0473		47n	PETP, 63V, 10%, RM5
0	C 14	59.34.2390		39p	CER 63V, 5%, N150
0	C 15	59.34.2390		39p	CER 63V, 5%, N150
0	C 16	59.06.0683		68n	PETP, 63V, 10%, RM5
0	C 17	59.06.0104		100n	PETP, 63V, 10%, RM5
0	C 18	59.06.0683		68n	PETP, 63V, 10%, RM5
0	C 19	59.06.0683		68n	PETP, 63V, 10%, RM5
0	C 20	59.34.4101		100p	CER 63V, 5%, N750
0	C 21	59.22.3470		47u	EL 10V, 20%, RM5
0	C 22	59.06.0683		68n	PETP, 63V, 10%, RM5
0	C 23	59.06.0103		10n	PETP, 63V, 10%, RM5
0	C 24	59.06.0104		100n	PETP, 63V, 10%, RM5
0	C 25	59.06.0103		10n	PETP, 63V, 10%, RM5
0	C 26	59.06.0104		100n	PETP, 63V, 10%, RM5
0	C 27	59.06.0104		100n	PETP, 63V, 10%, RM5
0	C 28	59.06.0104		100n	PETP, 63V, 10%, RM5
0	C 29	59.06.0104		100n	PETP, 63V, 10%, RM5
0	C 30	59.32.4102		1n	C 1000 P , 20%, 50V , CER
0	C 31	59.32.4102		1n	C 1000 P , 20%, 50V , CER
0	C 32	59.32.4102		1n	C 1000 P , 20%, 50V , CER
0	C 33	59.06.0104		100n	PETP, 63V, 10%, RM5
0	C 34	59.22.6100		10u	EL 35V, 20%, RM5
0	C 35	59.06.0103		10n	PETP, 63V, 10%, RM5
0	C 36	59.22.4221		220u	EL 16V, 20%, RM5
0	C 37	59.06.0683		68n	PETP, 63V, 10%, RM5
0	C 38	59.06.0683		68n	PETP, 63V, 10%, RM5
0	C 39	59.06.0683		68n	PETP, 63V, 10%, RM5
0	C 40	59.22.4221		220u	EL 16V, 20%, RM5
0	C 41	59.06.0103		10n	PETP, 63V, 10%, RM5
0	C 42	59.06.0683		68n	PETP, 63V, 10%, RM5
0	C 43	59.06.0104		100n	PETP, 63V, 10%, RM5
0	C 44	59.06.0104		100n	PETP, 63V, 10%, RM5
0	C 45	59.22.6100		10u	EL 35V, 20%, RM5
0	C 46	59.06.0473		47n	PETP, 63V, 10%, RM5
0	C 47	59.32.4102		1n	C 1000 P , 20%, 50V , CER
0	C 48	59.06.0683		68n	PETP, 63V, 10%, RM5
0	C 49	59.06.0683		68n	PETP, 63V, 10%, RM5
0	C 50	59.06.0683		68n	PETP, 63V, 10%, RM5
0	C 51	59.06.0683		68n	PETP, 63V, 10%, RM5
0	C 52	59.06.0683		68n	PETP, 63V, 10%, RM5
0	C 53	59.06.0683		68n	PETP, 63V, 10%, RM5
0	C 54	59.06.0103		10n	PETP, 63V, 10%, RM5
0	C 55	59.06.0103		10n	PETP, 63V, 10%, RM5
0	C 56	59.34.2270		27p	CER 63V, 5%, N150
0	C 57	59.34.0339		3p3	CER 63V, 5%, P100
0	C 58	59.06.0103		10n	PETP, 63V, 10%, RM5
0	C 59	59.22.6100		10u	EL 35V, 20%, RM5
0	C 60	59.06.0683		68n	PETP, 63V, 10%, RM5
0	C 61	59.06.0683		68n	PETP, 63V, 10%, RM5
0	C 62	59.06.0683		68n	PETP, 63V, 10%, RM5
0	C 63	59.06.0683		68n	PETP, 63V, 10%, RM5
0	C 64	59.06.0103		10n	PETP, 63V, 10%, RM5
0	C 65	59.22.6100		10u	EL 35V, 20%, RM5
0	C 66	59.06.0683		68n	PETP, 63V, 10%, RM5
0	C 67	59.34.0339		3p3	CER 63V, 5%, P100
0	C 68	59.06.0103		10n	PETP, 63V, 10%, RM5
0	C 69	59.06.0103		10n	PETP, 63V, 10%, RM5
0	C 70	59.32.4102		1n	C 1000 P , 20%, 50V , CER
0	C 71	59.34.2270		27p	CER 63V, 5%, N150
0	C 72	59.06.0473		47n	PETP, 63V, 10%, RM5
0	C 73	59.06.0473		47n	PETP, 63V, 10%, RM5
0	C 74	59.32.4102		1n	C 1000 P , 20%, 50V , CER
0	D 1	50.04.0127		BAT85	200mA, Schottky
0	D 2	50.04.0127		BAT85	200mA, Schottky
0	D 3	50.04.0127		BAT85	200mA, Schottky
0	D 4	50.04.0127		BAT85	200mA, Schottky
0	D 5	50.04.0127		BAT85	200mA, Schottky
0	D 6	50.04.0125		1N4448	75V, 150mA, 4ns, DO-35
0	D 7	50.04.0125		1N4448	75V, 150mA, 4ns, DO-35
0	DL 1	50.04.2202		HLMP1790	DL HLMP - 1790 GN
0	DL 2	50.04.2202		HLMP1790	DL HLMP - 1790 GN

Idx.	Pos.	Part No.	Qty.	Type/Val.	Description
0	F 1	51.01.0119		1.6A	T 5*20 L 250V
0	IC 1	1.940.946.21			SW 520 MADIOUT (50.14.1501)
0	IC 2	50.13.0203			IC CS 8402-CP ,A
0	IC 3	50.63.4003			IC ATT3030-125, XC3030A-6 ,A
0	IC 4	50.14.1009		CY7C128-35	IC MCM 2010 A - 35 ,A
0	IC 5	50.17.5652		74AC652	IC .. 74 AC 652 . ,A
0	IC 6	50.13.0202		CS8412	IC CS 8412-CP . ,A
0	IC 7	50.17.1574		74HC574	IC ... 74 HC 574 ., ,A
0	IC 8	50.16.0701		AM7968-125P	IC AM 7968-125 PC ,A
0	IC 9	50.17.1595		74HC595	IC ... 74 HC 595 ., ,A
0	IC 10	50.11.1002		LM360	High speed Comparator
0	IC 11	1.940.947.20			SW 520 TAXIREG (50.18.0101)
0	IC 12	50.17.1004		74HC04	IC ... 74 HC 04 ., ,A
0	IC 13	50.10.0124		MAX660	V-Converter ... +5.5V to -5.5V
0	IC 14	50.63.1702		CY7C130	IC CY7C 130 - 45 LC ,A
0	IC 15	50.17.8541		74BCT541	Octal Buffer, tri
0	IC 16	50.17.8574		74BCT574	Octal D-Type FF, tri
0	IC 17	50.17.8574		74BCT574	Octal D-Type FF, tri
0	IC 18	50.15.0121		75174	IC SN 75174 N
0	IC 19	50.17.1594		74HC594	IC ... 74 HC 594 ., ,A
0	IC 20	50.14.0133		5565	IC HM 6264LP-15 ,A
0	IC 21	1.940.945.20			SW 520 MADO (50.14.2002)
0	IC 22	50.16.0201		SCC2691	IC SCC 2691 AE 1 N 24 ,A
0	IC 23	50.14.2103		HY93C46S	EEPROM 64 * 16, serial
0	IC 24	50.17.0573		74HCT573	IC .. 74 HCT573 ., ,A
0	IC 25	50.63.0009		80C652	8bit microcontroller
0	IC 26	50.17.1589		74HC589	MC 74 HC 589 N
0	IC 27	50.17.1589		74HC589	MC 74 HC 589 N
0	IC 28	50.15.0114		9637	Dual diff Line Receiver
0	IC 29	50.17.1904		74HCU04	IC ... 74 HCU 04 ., ,A
0	IC 30	50.11.0159		MAX1232	IC MAX 1232 CPA, DS 1232
0	J 1	54.21.2031		BNC	J 1 POL PRINT/WINKEL BNC
1	L 1	62.02.3101		100uH	10%, radial RM 5
0	L 2	62.02.3100		10uH	10%, radial RM 5
0	L 3	62.02.3220		22uH	10%, radial RM 5
0	L 4	62.02.3100		10uH	10%, radial RM 5
0	L 5	62.03.0001		10uH	1A Toroid Chocke
0	L 6	62.02.3100		10uH	10%, radial RM 5
0	L 7	62.02.3100		10uH	10%, radial RM 5
0	MP 1	1.940.520.11			D19M MADO PCB
0	MP 2	1.010.057.43			Baugruppenschild
0	MP 3	43.01.0108		Label	ESE-WARNSCHILD
0	MP 4	1.101.001.20		Label	TEXT-ETIK. 5*20 HARDWARE -20
0	MP 5	1.010.117.51			TEXT-ETIK. 5*20 (T1.60A)
0	MP 7	1.010.015.50		Spacer	ISOLIER-SCHEIBE ZU TO 5
0	MP 8	89.01.1499	3 pcs		QUARZ - ISOLIERPLATTE
0	MP 10	1.940.520.01	1 pce		FRONTPLATTE
0	MP 11	1.940.600.04	1 pce		GRIFFEINLAGE 4TE
0	MP 12	49.02.0520	2 pcs	M2.5*12	Rändelschraube (Rack)
0	MP 13	49.02.0521	2 pcs		Metall-Buchse (Rack)
0	MP 14	49.02.0522	2 pcs		Kartenhalter (Rack)
0	MP 15	49.02.0523	2 pcs	M2.5*7	Senk-Schr, KS, Senkripp
0	MP 16	49.02.0504	1 pce	4TE	Frontplatten-Griff
0	MP 17	21.53.0279	2 pcs		Z - SCHR. IS , ZN , M2.5 * 6
0	MP 18	21.53.0284	1 pce		Z - SCHR. IS , ZN , M2.5 * 16
0	MP 19	28.99.0119	2 pcs		ROHRNIETE D 2.5*0.15* 9
0	P 1	54.11.2009		96p	EU-R 3*32p
0	P 2	54.02.0320		1p	Flatpin, 2.8*0.8mm
0	P 3	54.02.0320		1p	Flatpin, 2.8*0.8mm
0	P 4	54.01.0020		1p	Pin 0.63*0.63
0	P 5	54.01.0020		1p	Pin 0.63*0.63
0	P 6	54.02.0320		1p	Flatpin, 2.8*0.8mm
0	P 7	54.02.0320		1p	Flatpin, 2.8*0.8mm
0	P 8	54.02.0320		1p	Flatpin, 2.8*0.8mm
0	Q 1	50.03.0351		BC327-25	PNP, 800mA
0	Q 2	50.03.0351		BC327-25	PNP, 800mA
0	R 1	57.11.3102		1k0	MF, 1%, 0207
0	R 2	57.11.3103		10k	MF, 1%, 0207
0	R 3	57.11.3103		10k	MF, 1%, 0207
0	R 4	57.11.3103		10k	MF, 1%, 0207
0	R 5	57.11.3103		10k	MF, 1%, 0207
0	R 6	57.11.3150		15R	MF, 1%, 0207
0	R 7	57.11.3271		270R	MF, 1%, 0207
0	R 8	57.11.3150		15R	MF, 1%, 0207
0	R 9	57.11.3271		270R	MF, 1%, 0207
0	R 10	57.11.3102		1k0	MF, 1%, 0207
0	R 11	57.11.3103		10k	MF, 1%, 0207
0	R 12	57.11.3102		1k0	MF, 1%, 0207

D19M Mado Coaxial 1.940.520.21

Idx.	Pos.	Part No.	Qty.	Type/Val.	Description
0	R 13	57.11.3102		1k0	MF, 1%, 0207
0	R 14	57.11.3102		1k0	MF, 1%, 0207
0	R 15	not used		470R	MF, 1%, 0207
0	R 16	57.11.3102		1k0	MF, 1%, 0207
0	R 17	57.11.3223		22k	MF, 1%, 0207
0	R 18	57.10.1101		100R	MF, 1%, 0204
0	R 19	57.11.3102		1k0	MF, 1%, 0207
0	R 20	57.11.3330		33R	MF, 1%, 0207
0	R 21	57.11.3181		180R	MF, 1%, 0207
0	R 22	57.10.1101		100R	MF, 1%, 0204
0	R 23	57.11.3223		22k	MF, 1%, 0207
0	R 24	57.10.1750		75R	MF, 1%, 0204
0	R 25	57.10.1750		75R	MF, 1%, 0204
0	R 26	57.11.3103		10k	MF, 1%, 0207
0	R 27	57.11.3102		1k0	MF, 1%, 0207
0	R 28	57.11.3102		1k0	MF, 1%, 0207
0	R 29	57.11.3222		2k2	MF, 1%, 0207
0	R 30	57.11.3222		2k2	MF, 1%, 0207
0	R 31	57.11.3102		1k0	MF, 1%, 0207
0	R 32	57.11.3103		10k	MF, 1%, 0207
0	R 33	57.11.3103		10k	MF, 1%, 0207
0	R 34	57.11.3103		10k	MF, 1%, 0207
0	R 35	57.11.3102		1k0	MF, 1%, 0207
0	R 36	57.11.3105		1M0	MF, 1%, 0207
0	R 37	57.11.3561		560R	MF, 1%, 0207
0	R 38	57.11.3473		47k	MF, 1%, 0207
0	R 39	57.11.3103		10k	MF, 1%, 0207
0	R 40	57.11.3473		47k	MF, 1%, 0207
0	R 41	57.11.3561		560R	MF, 1%, 0207
0	RZ 1	57.88.4102		8*1k	2%, SIP 9
0	RZ 2	57.88.4102		8*1k	2%, SIP 9
0	RZ 3	57.88.4102		8*1k	2%, SIP 9
0	RZ 4	57.88.4102		8*1k	2%, SIP 9
0	RZ 5	57.88.4102		8*1k	2%, SIP 9
0	RZ 6	57.88.4333		8*33k	2%, SIP 9
0	S 1	55.11.0202		SPST	Toggle on - none - on
0	S 2	55.03.0122		1*a	S 1 TASTE, 1*A, PRINT,IMPULS
0	T 1	63.15.0021			RF - Trafo
0	T 2	63.15.0021			RF - Trafo
0	T 3	63.15.0001			IMPULSTRANSFORMATOR
0	W 1	1.010.324.64		Wire	DRAHTBRUECKE U, 4.3*10.2, 0.6
0	W 2	1.010.324.64		Wire	DRAHTBRUECKE U, 4.3*10.2, 0.6
0	XDL 1	50.20.2501		Spacer	LED-Sockel
0	XDL 2	50.20.2501		Spacer	LED-Sockel
0	XF 1	53.03.0118			XF 5 * 20, PRINT-LIEGEND
0	XIC 1	53.03.0166		8p	DIL 0.3", löt, gerade
0	XIC 3	53.03.2284		PLCC84p	PLCC-Socket 84p
0	XIC 11	53.03.0182		24p	DIL 0.3", löt, gerade
0	XIC 14	53.03.2252		PLCC52p	PLCC-Socket 52p
0	XIC 15	53.03.0165		20p	DIL 0.3", löt, gerade
0	XIC 16	53.03.0165		20p	DIL 0.3", löt, gerade
0	XIC 17	53.03.0165		20p	DIL 0.3", löt, gerade
0	XIC 18	53.03.0168		16p	DIL 0.3", löt, gerade
0	XIC 21	53.03.0173		28p	DIL 0.6", löt, gerade
0	XIC 25	53.03.2244		PLCC44p	PLCC-Socket 44p
0	XIC 28	53.03.0166		8p	DIL 0.3", löt, gerade
0	Y 1	89.01.1013		12.500MHz	12.500 000 MHz, HC 49/U
0	Y 2	89.01.1602		11.2896MHz	TCXO Xtal-Oscillator temp comp
0	Y 3	89.01.1601		12.288MHz	TCXO Xtal-Oscillator temp comp
0	Y 4	89.01.1014		12.000MHz	12.000 000 MHz, HC 49/U
0	Y 5	89.01.1002		3.686MHz	3.686 400 MHz, HC 18/U

End of List

Comments:

(1) 28.05.1998 Improvement of clock jitter:
C5 59.22.5220 L1 62.02.3101

Mado Optical 1.940.530.21

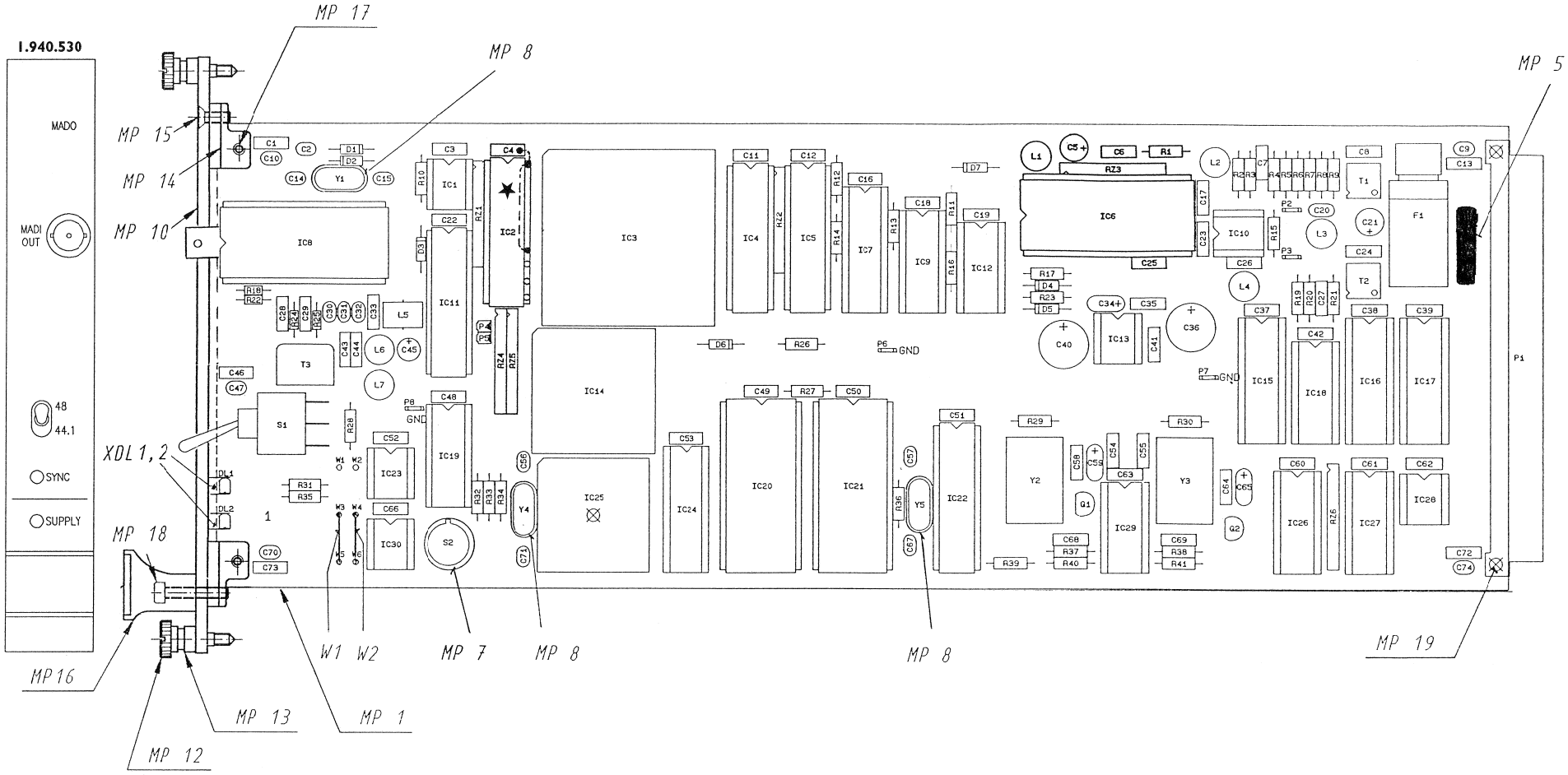

Mado Optical 1.940.530.21

Idx.	Pos.	Part No.	Qty.	Type/Val.	Description
0	C 1	not usad		47n	PETP, 63V, 10%, RM5
0	C 2	59.34.2390		39p	CER 63V, 5%, N150
0	C 3	59.06.0683		68n	PETP, 63V, 10%, RM5
0	C 4	59.06.0683		68n	PETP, 63V, 10%, RM5
1	C 5	59.22.5220		22u	EL 25V, 20%, RM5
0	C 6	59.06.0473		47n	PETP, 63V, 10%, RM5
0	C 7	59.06.0133		10n	PETP, 63V, 10%, RM5
0	C 8	59.06.0134		100n	PETP, 63V, 10%, RM5
0	C 9	59.32.4132		1n	C 1000 P , 20%, 50V , CER
0	C 10	not used		1n	C 1000 P , 20%, 50V , CER
0	C 11	59.06.0683		68n	PETP, 63V, 10%, RM5
0	C 12	59.06.0683		68n	PETP, 63V, 10%, RM5
0	C 13	59.06.0473		47n	PETP, 63V, 10%, RM5
0	C 14	59.34.2390		39p	CER 63V, 5%, N150
0	C 15	59.34.2390		39p	CER 63V, 5%, N150
0	C 16	59.06.0683		68n	PETP, 63V, 10%, RM5
0	C 17	59.06.0134		100n	PETP, 63V, 10%, RM5
0	C 18	59.06.0683		68n	PETP, 63V, 10%, RM5
0	C 19	59.06.0683		68n	PETP, 63V, 10%, RM5
0	C 20	59.34.4101		100p	CER 63V, 5%, N750
0	C 21	59.22.3470		47u	EL 10V, 20%, RM5
0	C 22	59.06.0683		68n	PETP, 63V, 10%, RM5
0	C 23	59.06.0133		10n	PETP, 63V, 10%, RM5
0	C 24	59.06.0134		100n	PETP, 63V, 10%, RM5
0	C 25	59.06.0133		10n	PETP, 63V, 10%, RM5
0	C 26	59.06.0134		100n	PETP, 63V, 10%, RM5
0	C 27	59.06.0134		100n	PETP, 63V, 10%, RM5
0	C 28	not used		100n	PETP, 63V, 10%, RM5
0	C 29	not used		100n	PETP, 63V, 10%, RM5
0	C 30	59.32.4132		1n	C 1000 P , 20%, 50V , CER
0	C 31	59.32.4132		1n	C 1000 P , 20%, 50V , CER
0	C 32	59.32.4132		1n	C 1000 P , 20%, 50V , CER
0	C 33	59.06.0134		100n	PETP, 63V, 10%, RM5
0	C 34	59.22.6130		10u	EL 35V, 20%, RM5
0	C 35	59.06.0133		10n	PETP, 63V, 10%, RM5
0	C 36	59.22.4221		220u	EL 16V, 20%, RM5
0	C 37	59.06.0683		68n	PETP, 63V, 10%, RM5
0	C 38	59.06.0683		68n	PETP, 63V, 10%, RM5
0	C 39	59.06.0683		68n	PETP, 63V, 10%, RM5
0	C 40	59.22.4221		220u	EL 16V, 20%, RM5
0	C 41	59.06.0133		10n	PETP, 63V, 10%, RM5
0	C 42	59.06.0683		68n	PETP, 63V, 10%, RM5
0	C 43	59.06.0134		100n	PETP, 63V, 10%, RM5
0	C 44	59.06.0134		100n	PETP, 63V, 10%, RM5
0	C 45	59.22.6100		10u	EL 35V, 20%, RM5
0	C 46	not used		47n	PETP, 63V, 10%, RM5
0	C 47	not used		1n	C 1000 P , 20%, 50V , CER
0	C 48	59.06.0683		68n	PETP, 63V, 10%, RM5
0	C 49	59.06.0683		68n	PETP, 63V, 10%, RM5
0	C 50	59.06.0683		68n	PETP, 63V, 10%, RM5
0	C 51	59.06.0683		68n	PETP, 63V, 10%, RM5
0	C 52	59.06.0683		68n	PETP, 63V, 10%, RM5
0	C 53	59.06.0683		68n	PETP, 63V, 10%, RM5
0	C 54	59.06.0103		10n	PETP, 63V, 10%, RM5
0	C 55	59.06.0103		10n	PETP, 63V, 10%, RM5
0	C 56	59.34.2270		27p	CER 63V, 5%, N150
0	C 57	59.34.0339		3p3	CER 63V, 5%, P100
0	C 58	59.06.0103		10n	PETP, 63V, 10%, RM5
0	C 59	59.22.6100		10u	EL 35V, 20%, RM5
0	C 60	59.06.0683		68n	PETP, 63V, 10%, RM5
0	C 61	59.06.0683		68n	PETP, 63V, 10%, RM5
0	C 62	59.06.0683		68n	PETP, 63V, 10%, RM5
0	C 63	59.06.0683		68n	PETP, 63V, 10%, RM5
0	C 64	59.06.0103		10n	PETP, 63V, 10%, RM5
0	C 65	59.22.6100		10u	EL 35V, 20%, RM5
0	C 66	59.06.0683		68n	PETP, 63V, 10%, RM5
0	C 67	59.34.0339		3p3	CER 63V, 5%, P100
0	C 68	59.06.0103		10n	PETP, 63V, 10%, RM5
0	C 69	59.06.0103		10n	PETP, 63V, 10%, RM5
0	C 70	not used		1n	C 1000 P , 20%, 50V , CER
0	C 71	59.34.2270		27p	CER 63V, 5%, N150
0	C 72	59.06.0473		47n	PETP, 63V, 10%, RM5
0	C 73	not used		47n	PETP, 63V, 10%, RM5
0	C 74	59.32.4102		1n	C 1000 P , 20%, 50V , CER
0	D 1	50.04.0127		BAT85	200mA, Schottky
0	D 2	50.04.0127		BAT85	200mA, Schottky
0	D 3	50.04.0127		BAT85	200mA, Schottky
0	D 4	50.04.0127		BAT85	200mA, Schottky
0	D 5	50.04.0127		BAT85	200mA, Schottky
0	D 6	50.04.0125		1N4448	75V, 150mA, 4ns, DC-35
0	D 7	50.04.0125		1N4448	75V, 150mA, 4ns, DC-35
0	DL 1	50.04.2232		HLMP1790	DL HLMP - 1790 GN
0	DL 2	50.04.2232		HLMP1790	DL HLMP - 1790 GN

Idx.	Pos.	Part No.	Qty.	Type/Val.	Description
0	F 1	51.01.0119		1.6A	T 5*20 L 250V
0	IC 1	1.940.946.21			SW 520 MADIOUT (50.14.1501)
0	IC 2	50.13.0203			IC CS 8402-CP ,A
0	IC 3	50.63.4003			IC ATT3030-125, XC3030A-6 ,A
0	IC 4	50.14.1009		CY7C128-35	IC MCM 2018 A - 35 ,A
0	IC 5	50.17.5652		74AC652	IC .. 74 AC 652 . ,A
0	IC 6	50.13.0202		CS8412	IC CS 8412-CP ,A
0	IC 7	50.17.1574		74HC574	IC ... 74 HC 574 ., ,A
0	IC 8	89.10.0001			DLT 6000 (LWL - MODUL) ,A
0	IC 9	50.17.1595		74HC595	IC ... 74 HC 595 ., ,A
0	IC 10	50.11.1002		LM360	High speed Comparator
0	IC 11	1.940.947.20			SW 520 TAXIREG (50.18.0101)
0	IC 12	50.17.1004		74HC04	IC ... 74 HC 04 ., ,A
0	IC 13	50.10.0124		MAX660	V-Converter ... +5.5V to -5.5V
0	IC 14	50.63.1702		CY7C130	IC CY7C 130 - 45 LC ,A
0	IC 15	50.17.8541		74BCT541	Octal Buffer, tri
0	IC 16	50.17.8574		74BCT574	Octal D-Type FF, tri
0	IC 17	50.17.8574		74BCT574	Octal D-Type FF, tri
0	IC 18	50.15.0121		75174	IC SN 75174 N
0	IC 19	50.17.1594		74HC594	IC ... 74 HC 594 ., ,A
0	IC 20	50.14.0133		5565	IC HM 6264LP-15 ,A
0	IC 21	1.940.945.20			SW 520 MADO (50.14.2002)
0	IC 22	50.16.0201		SCC2691	IC SCC 2691 AE 1 N 24 ,A
0	IC 23	50.14.2103		HY93C46S	EEPROM 64 * 16, serial
0	IC 24	50.17.0573		74HCT573	IC .. 74 HCT573 ., ,A
0	IC 25	50.63.0009		80C652	8bit microcontroller
0	IC 26	50.17.1589		74HC589	MC 74 HC 589 N
0	IC 27	50.17.1589		74HC589	MC 74 HC 589 N
0	IC 28	50.15.0114		9637	Dual diff Line Receiver
0	IC 29	50.17.1904		74HCU04	IC ... 74 HCU 04 ., ,A
0	IC 30	50.11.0159		MAX1232	IC MAX 1232 CPA, DS 1232
1	L 1	62.02.3101		100uH	10%, radial RM 5
0	L 2	62.02.3100		10uH	10%, radial RM 5
0	L 3	62.02.3220		22uH	10%, radial RM 5
0	L 4	62.02.3100		10uH	10%, radial RM 5
0	L 5	62.03.0001		10uH	1A Toroid Chocke
0	L 6	62.02.3100		10uH	10%, radial RM 5
0	L 7	62.02.3100		10uH	10%, radial RM 5
0	MP 1	1.940.520.11			D19M MADO PCB
0	MP 2	1.010.057.43			Baugruppenschild
0	MP 3	43.01.0108		Label	ESE-WARNSCHILD
0	MP 4	1.101.001.20		Label	TEXT-ETIK. 5*20 HARDWARE -20
0	MP 5	1.010.117.51			TEXT-ETIK. 5*20 (T1.60A)
0	MP 7	1.010.015.50		Spacer	ISOLIER-SCHEIBE ZU TO 5
0	MP 8	89.01.1499	3 pcs		QUARZ - ISOLIERPLATTE
0	MP 10	1.940.530.01	1 pce		FRONTPLATTE
0	MP 11	1.940.600.04	1 pce		GRIFFEINLAGE 4TE
0	MP 12	49.02.0520	2 pcs	M2.5*12	Rändelschraube (Rack)
0	MP 13	49.02.0521	2 pcs		Metall-Buchse (Rack)
0	MP 14	49.02.0522	2 pcs		Kartenhalter (Rack)
0	MP 15	49.02.0523	1 pce	M2.5*7	Senk-Schr, KS, Senkripp
0	MP 16	49.02.0504	1 pce	4TE	Frontplatten-Griff
0	MP 17	21.53.0279	2 pcs		Z - SCHR. IS , ZN , M2.5 * 6
0	MP 18	21.53.0284	1 pce		Z - SCHR. IS , ZN , M2.5 * 16
0	MP 19	28.99.0119	2 pcs		ROHRNIETE D 2.5*0.15* 9
0	P 1	54.11.2009		96p	EU-R 3*32p
0	P 2	54.02.0320		1p	Flatpin, 2.8*0.8mm
0	P 3	54.02.0320		1p	Flatpin, 2.8*0.8mm
0	P 4	54.01.0020		1p	Pin 0.63*0.63
0	P 5	54.01.0020		1p	Pin 0.63*0.63
0	P 6	54.02.0320		1p	Flatpin, 2.8*0.8mm
0	P 7	54.02.0320		1p	Flatpin, 2.8*0.8mm
0	P 8	54.02.0320		1p	Flatpin, 2.8*0.8mm
0	Q 1	50.03.0351		3C327-25	PNP, 800mA
0	Q 2	50.03.0351		3C327-25	PNP, 800mA
0	R 1	57.11.3102		1k0	MF, 1%, 0207
0	R 2	57.11.3103		10k	MF, 1%, 0207
0	R 3	57.11.3103		10k	MF, 1%, 0207
0	R 4	57.11.3103		10k	MF, 1%, 0207
0	R 5	57.11.3103		10k	MF, 1%, 0207
0	R 6	57.11.3150		15R	MF, 1%, 0207
0	R 7	57.11.3271		270R	MF, 1%, 0207
0	R 8	57.11.3150		15R	MF, 1%, 0207
0	R 9	57.11.3271		270R	MF, 1%, 0207
0	R 10	57.11.3102		1k0	MF, 1%, 0207
0	R 11	57.11.3103		10k	MF, 1%, 0207
0	R 12	57.11.3102		1k0	MF, 1%, 0207
0	R 13	57.11.3102		1k0	MF, 1%, 0207
0	R 14	57.11.3102		1k0	MF, 1%, 0207

Idx.	Pos.	Part No.	Qty.	Type/Val.	Description
0	R 15	not used		470R	MF, 1%, 0207
0	R 16	57.11.3102		1k0	MF, 1%, 0207
0	R 17	57.11.3223		22k	MF, 1%, 0207
0	R 18	not used		100R	MF, 1%, 0204
0	R 19	57.11.3102		1k0	MF, 1%, 0207
0	R 20	57.11.3330		33R	MF, 1%, 0207
0	R 21	57.11.3181		180R	MF, 1%, 0207
0	R 22	not used		100R	MF, 1%, 0204
0	R 23	57.11.3223		22k	MF, 1%, 0207
0	R 24	not used		75R	MF, 1%, 0204
0	R 25	not used		75R	MF, 1%, 0204
0	R 26	57.11.3103		10k	MF, 1%, 0207
0	R 27	57.11.3102		1k0	MF, 1%, 0207
0	R 28	57.11.3102		1k0	MF, 1%, 0207
0	R 29	57.11.3222		2k2	MF, 1%, 0207
0	R 30	57.11.3222		2k2	MF, 1%, 0207
0	R 31	57.11.3102		1k0	MF, 1%, 0207
0	R 32	57 11.3103		10k	MF, 1%, 0207
0	R 33	57 11.3103		10k	MF, 1%, 0207
0	R 34	57 11.3103		10k	MF, 1%, 0207
0	R 35	57 11.3102		1k0	MF, 1%, 0207
0	R 36	57 11.3105		1M0	MF, 1%, 0207
0	R 37	57 11.3561		560R	MF, 1%, 0207
0	R 38	57 11.3473		47k	MF, 1%, 0207
0	R 39	57 11.3103		10k	MF, 1%, 0207
0	R 40	57 11.3473		47k	MF, 1%, 0207
0	R 41	57 11.3561		560R	MF, 1%, 0207
0	RZ 1	57 88.4102		8*1k	2%, SIP 9
0	RZ 2	57 88.4102		8*1k	2%, SIP 9
0	RZ 3	57 88.4102		8*1k	2%, SIP 9
0	RZ 4	57 88.4102		8*1k	2%, SIP 9
0	RZ 5	57 88.4102		8*1k	2%, SIP 9
0	RZ 6	57 88.4333		8*33k	2%, SIP 9
0	S 1	55 11.0202		SPST	Toggle on - none - on
0	S 2	55 03.0122		1*a	S 1 TASTE, 1*A, PRINT,IMPULS
0	T 1	63 15.0021			RF - Trafo
0	T 2	63 15.0021			RF - Trafo
0	T 3	not used			IMPULSTRANSFORMATOR
0	W 1	1.010.324.64		Wire	DRAHTBRUECKE U, 4.3*10.2, 0.6
0	W 2	1.010.324.64		Wire	DRAHTBRUECKE U, 4.3*10.2, 0.6
0	XDL 1	50 20.2501		Spacer	LED-Sockel
0	XDL 2	50 20.2501		Spacer	LED-Sockel
0	XF 1	53 03.0118			XF 5 * 20, PRINT-LIEGEND
0	XIC 1	53 03.0166		8p	DIL 0.3", löt, gerade
0	XIC 3	53 03.2284		PLCC84p	PLCC-Socket 84p
0	XIC 11	53 03.0182		24p	DIL 0.3", löt, gerade
0	XIC 14	53 03.2252		PLCC52p	PLCC-Socket 52p
0	XIC 15	53 03.0165		20p	DIL 0.3", löt, gerade
0	XIC 16	53 03.0165		20p	DIL 0.3", löt, gerade
0	XIC 17	53 03.0165		20p	DIL 0.3", löt, gerade
0	XIC 18	53 03.0168		16p	DIL 0.3", löt, gerade
0	XIC 21	53 03.0173		28p	DIL 0.6", löt, gerade
0	XIC 25	53 03.2244		PLCC44p	PLCC-Socket 44p
0	XIC 28	53 03.0166		8p	DIL 0.3", löt, gerade
0	Y 1	89 01.1013		12.500MHz	12.500 000 MHz, HC 49/U
0	Y 2	89 01.1602		11.2896MHz	TCXO Xtal-Oscillator temp comp
0	Y 3	89.01.1601		12.288MHz	TCXO Xtal-Oscillator temp comp
0	Y 4	89.01.1014		12.000MHz	12.000 000 MHz, HC 49/U
0	Y 5	89.01.1002		3.686MHz	3.686 400 MHz, HC 18/U

End of List

Comments:

new software 1.940.947-20 to -21
(1) 28.05.1998 Improvement of clock jitter:
C5 59.22.5220 L1 62.02.2101

Block Diagram
D19M SFC Board 1.940.540

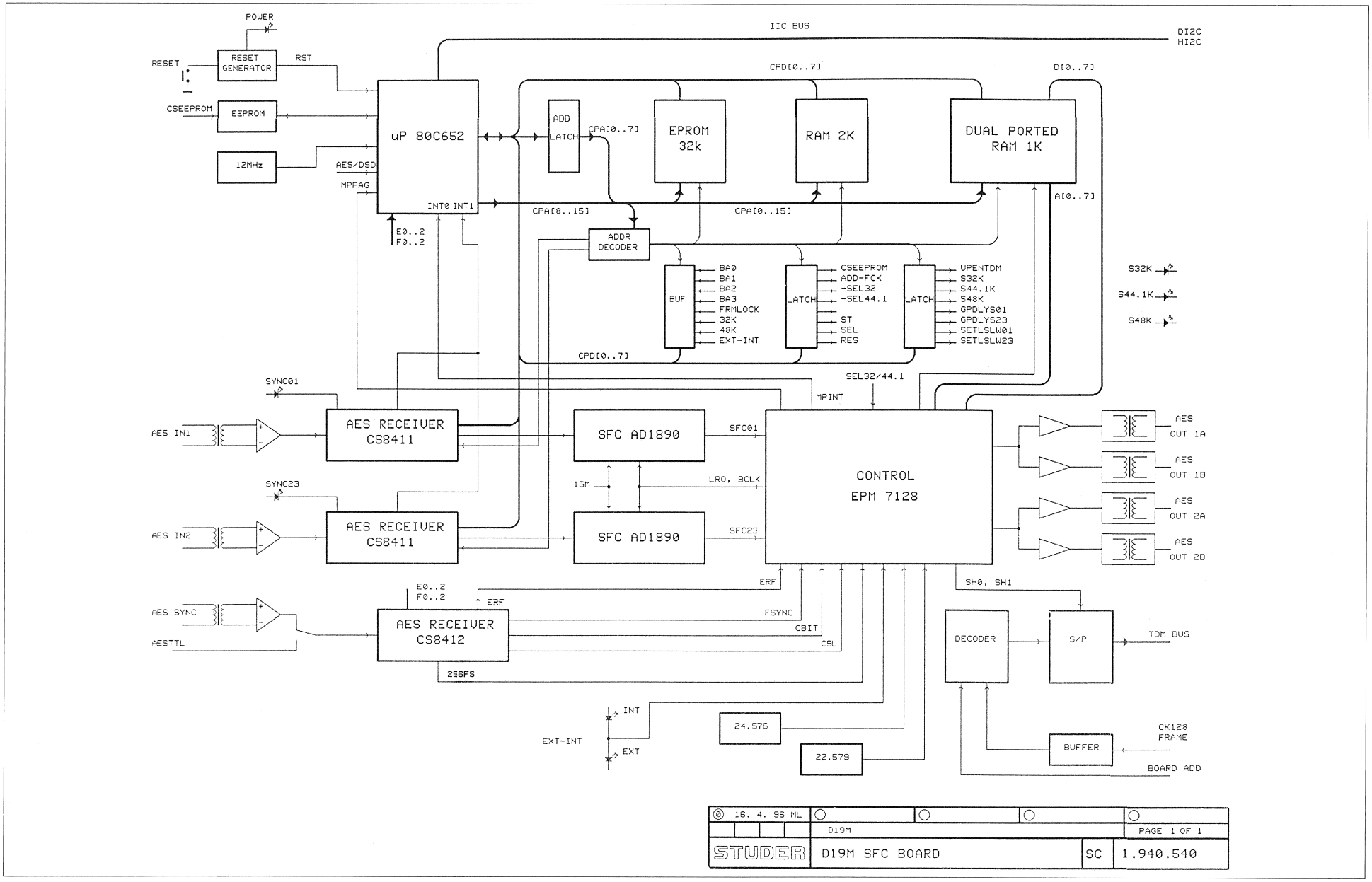

D19M SFC Board 1.940.540.22

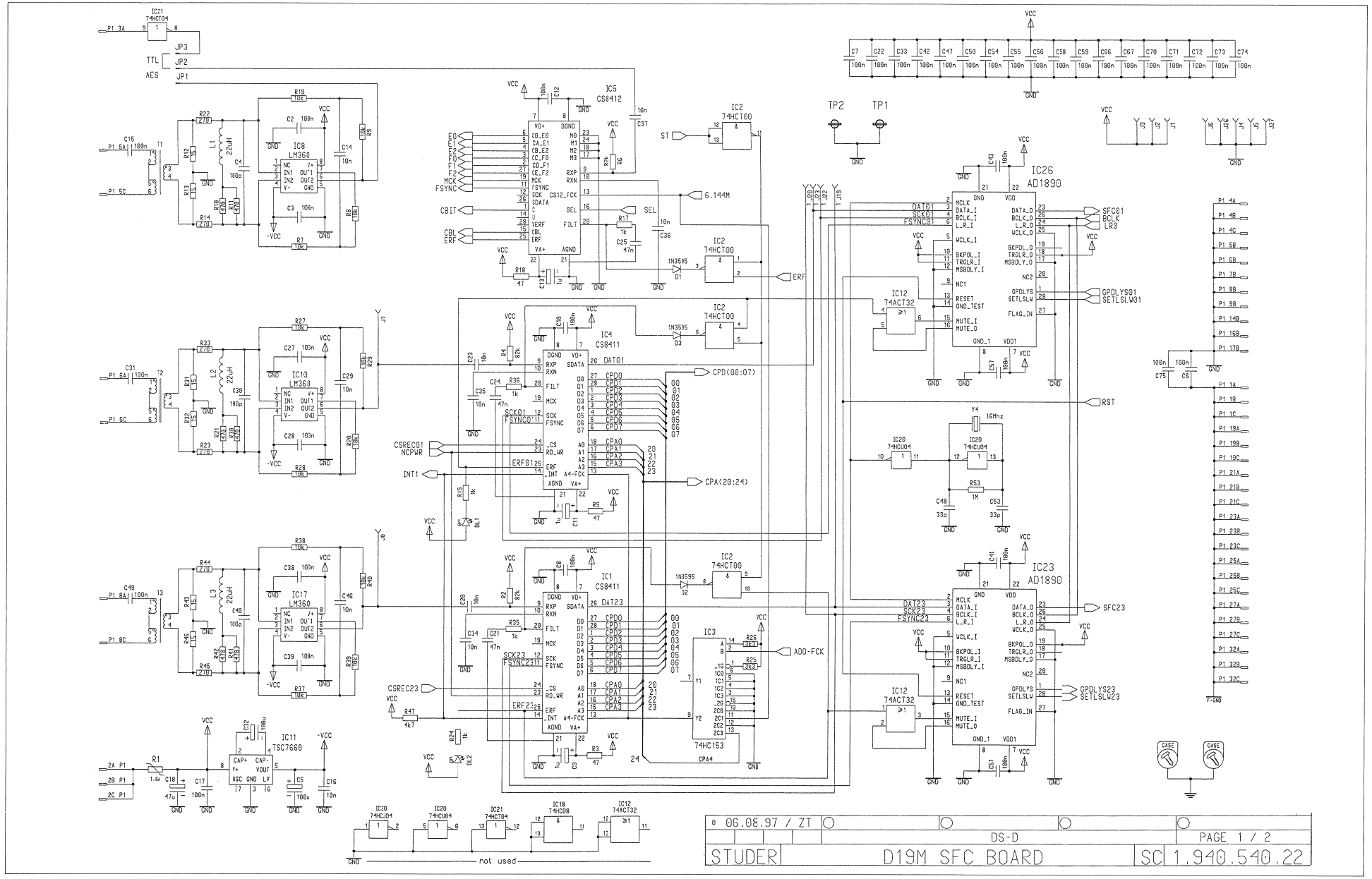

0 06.08.97 / ZT	DS-D	PAGE 1 / 2
STUDER	D19M SFC BOARD	SC 1.940.540.22

D19M SFC Board 1.940.540.22

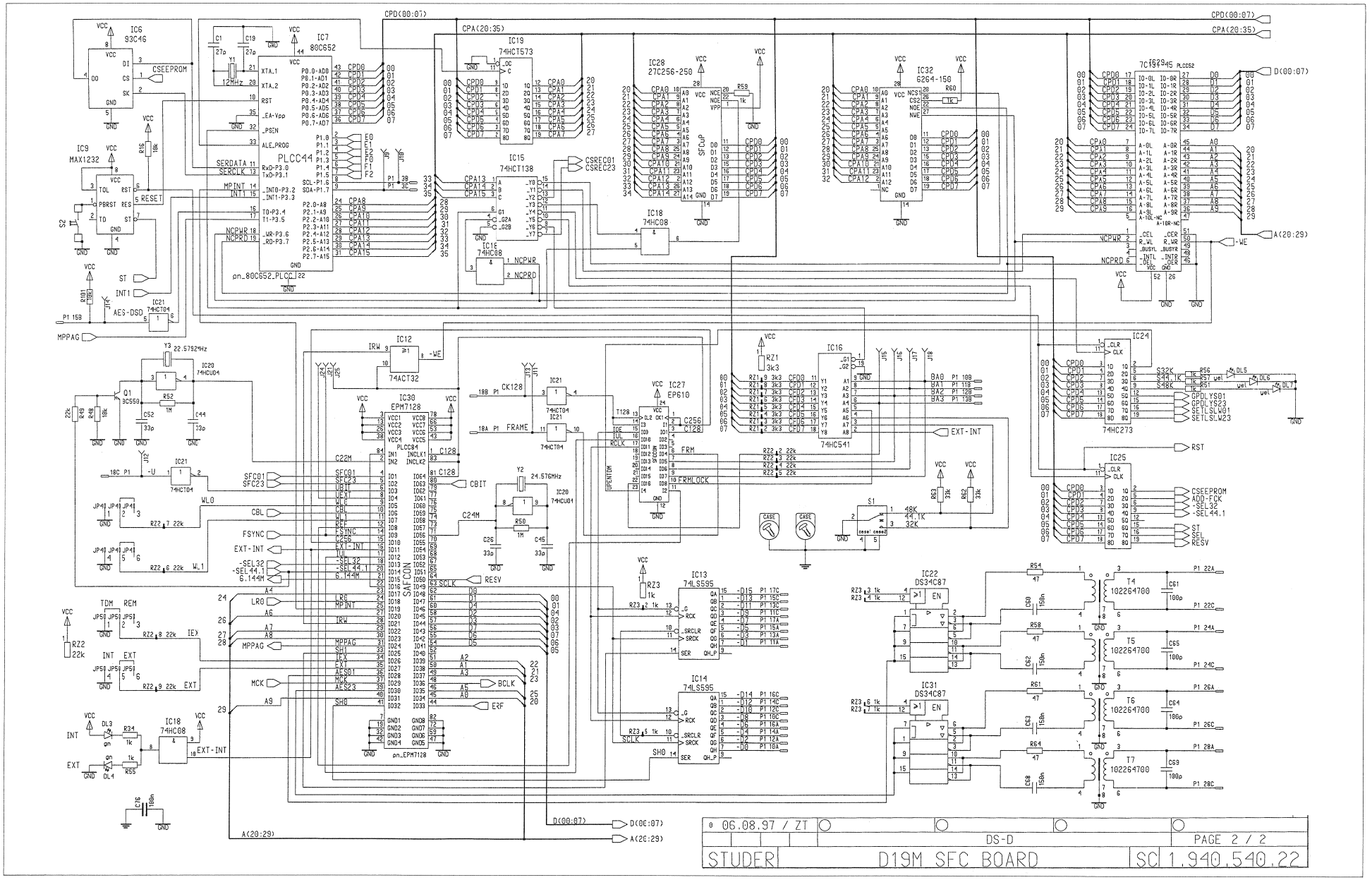

D19M SFC Board 1.940.540.22

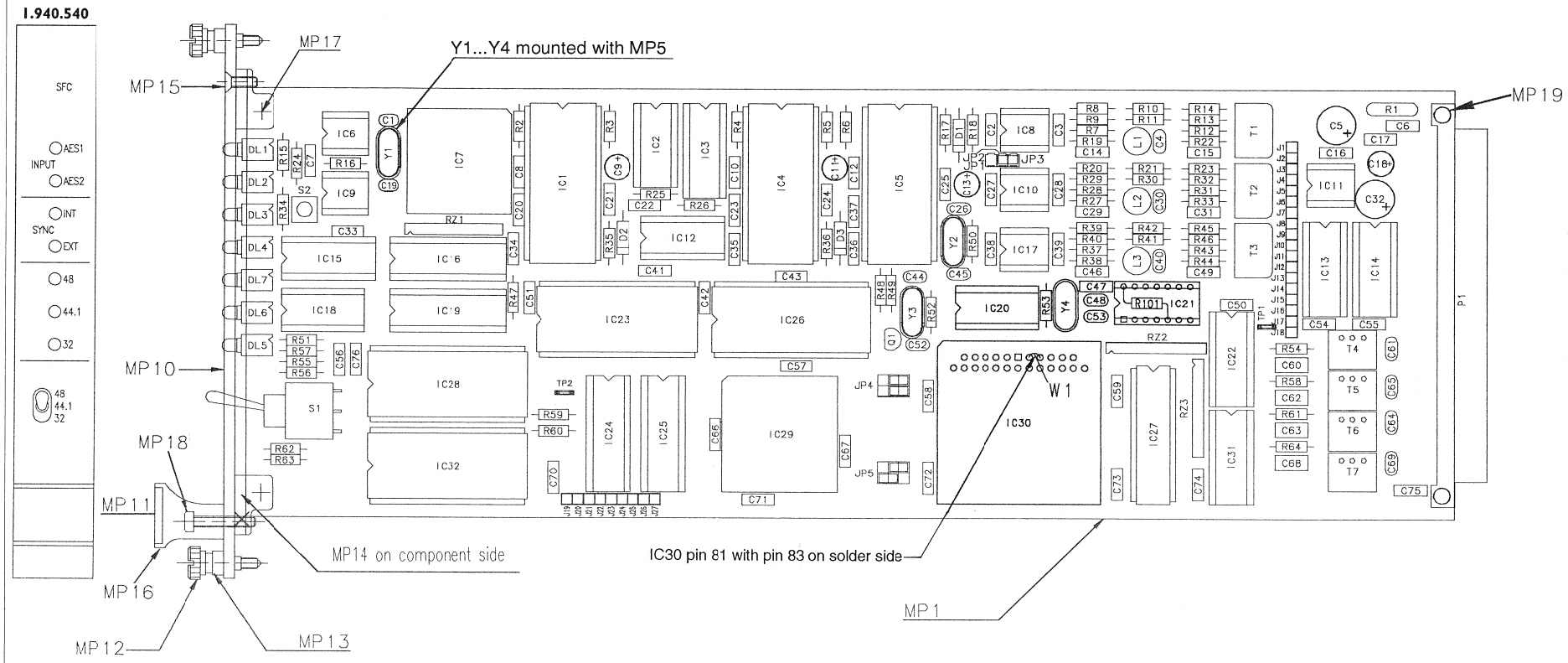

Modification Aenderung	.	.	.	.	3
	.	.	.	.	2
	.	.	.	.	1
Edition Ausgabe	06.08.97	ZT			0
	Date Datum	Visa Gez.	Checked Gepr.	Seen Ges.	Index

Copy to: Kopie fuer: -

STUDER REGENSDORF — Description: D19M SFC BOARD "ESE" — Number: 1.940.540.22

D19M SFC Board 1.940.540.22

Idx.	Pos.	Part No.	Qty.	Type/Val.	Description
0	C 1	59.34.2270		27p	CER 63V, 5%, N150
0	C 2	59.06.0104		100n	PETP, 63V, 10%, RM5
0	C 3	59.06.0104		100n	PETP, 63V, 10%, RM5
0	C 4	59.34.4101		100p	CER 63V, 5%, N750
0	C 5	59.22.4101		100u	EL 16V, 20%, RM5
0	C 6	59.06.0104		100n	PETP, 63V, 10%, RM5
0	C 7	59.06.0104		100n	PETP, 63V, 10%, RM5
0	C 8	59.06.0104		100n	PETP, 63V, 10%, RM5
0	C 9	59.22.8109		1u	EL 50V, 20%, RM5
0	C 10	59.06.0104		100n	PETP, 63V, 10%, RM5
0	C 11	59.22.8109		1u	EL 50V, 20%, RM5
0	C 12	59.06.0104		100n	PETP, 63V, 10%, RM5
0	C 13	59.22.8109		1u	EL 50V, 20%, RM5
0	C 14	59.06.0103		10n	PETP, 63V, 10%, RM5
0	C 15	59.06.0104		100n	PETP, 63V, 10%, RM5
0	C 16	59.06.0103		10n	PETP, 63V, 10%, RM5
0	C 17	59.06.0104		100n	PETP, 63V, 10%, RM5
0	C 18	59.22.3470		47u	EL 10V, 20%, RM5
0	C 19	59.34.2270		27p	CER 63V, 5%, N150
0	C 20	59.06.0103		10n	PETP, 63V, 10%, RM5
0	C 21	59.06.0473		47n	PETP, 63V, 10%, RM5
0	C 22	59.06.0104		100n	PETP, 63V, 10%, RM5
0	C 23	59.06.0103		10n	PETP, 63V, 10%, RM5
0	C 24	59.06.0473		47n	PETP, 63V, 10%, RM5
0	C 25	59.06.0473		47n	PETP, 63V, 10%, RM5
0	C 26	59.34.2330		33p	CER 63V, 5%, N150
0	C 27	59.06.0104		100n	PETP, 63V, 10%, RM5
0	C 28	59.06.0104		100n	PETP, 63V, 10%, RM5
0	C 29	59.06.0103		10n	PETP, 63V, 10%, RM5
0	C 30	59.34.4101		100p	CER 63V, 5%, N750
0	C 31	59.06.0104		100n	PETP, 63V, 10%, RM5
0	C 32	59.22.4101		100u	EL 16V, 20%, RM5
0	C 33	59.06.0104		100n	PETP, 63V, 10%, RM5
0	C 34	59.06.0103		10n	PETP, 63V, 10%, RM5
0	C 35	59.06.0103		10n	PETP, 63V, 10%, RM5
0	C 36	59.06.0103		10n	PETP, 63V, 10%, RM5
0	C 37	59.06.0103		10n	PETP, 63V, 10%, RM5
0	C 38	59.06.0104		100n	PETP, 63V, 10%, RM5
0	C 39	59.06.0104		100n	PETP, 63V, 10%, RM5
0	C 40	59.34.4101		100p	CER 63V, 5%, N750
0	C 41	59.06.0104		100n	PETP, 63V, 10%, RM5
0	C 42	59.06.0104		100n	PETP, 63V, 10%, RM5
0	C 43	59.06.0104		100n	PETP, 63V, 10%, RM5
0	C 44	59.34.2330		33p	CER 63V, 5%, N150
0	C 45	59.34.2330		33p	CER 63V, 5%, N150
0	C 46	59.06.0103		10n	PETP, 63V, 10%, RM5
0	C 47	59.06.0104		100n	PETP, 63V, 10%, RM5
0	C 48	59.34.2330		33p	CER 63V, 5%, N150
0	C 49	59.06.0104		100n	PETP, 63V, 10%, RM5
0	C 50	59.06.0104		100n	PETP, 63V, 10%, RM5
0	C 51	59.06.0104		100n	PETP, 63V, 10%, RM5
0	C 52	59.34.2330		33p	CER 63V, 5%, N150
0	C 53	59.34.2330		33p	CER 63V, 5%, N150
0	C 54	59.06.0104		100n	PETP, 63V, 10%, RM5
0	C 55	59.06.0104		100n	PETP, 63V, 10%, RM5
0	C 56	59.06.0104		100n	PETP, 63V, 10%, RM5
0	C 57	59.06.0104		100n	PETP, 63V, 10%, RM5
0	C 58	59.06.0104		100n	PETP, 63V, 10%, RM5
0	C 59	59.06.0104		100n	PETP, 63V, 10%, RM5
0	C 60	59.06.0154		150n	PETP, 63V, 10%, RM5
0	C 61	59.34.4101		100p	CER 63V, 5%, N750
0	C 62	59.06.0154		150n	PETP, 63V, 10%, RM5
0	C 63	59.06.0154		150n	PETP, 63V, 10%, RM5
0	C 64	59.34.4101		100p	CER 63V, 5%, N750
0	C 65	59.34.4101		100p	CER 63V, 5%, N750
0	C 66	59.06.0104		100n	PETP, 63V, 10%, RM5
0	C 67	59.06.0104		100n	PETP, 63V, 10%, RM5
0	C 68	59.06.0154		150n	PETP, 63V, 10%, RM5
0	C 69	59.34.4101		100p	CER 63V, 5%, N750
0	C 70	59.06.0104		100n	PETP, 63V, 10%, RM5
0	C 71	59.06.0104		100n	PETP, 63V, 10%, RM5
0	C 72	59.06.0104		100n	PETP, 63V, 10%, RM5
0	C 73	59.06.0104		100n	PETP, 63V, 10%, RM5
0	C 74	59.06.0104		100n	PETP, 63V, 10%, RM5
0	C 75	59.06.0104		100n	PETP, 63V, 10%, RM5
0	C 76	59.06.0104		100n	PETP, 63V, 10%, RM5
0	D 1	50.04.0134		1N3595	D 1N 3595, FDH 300,
0	D 2	50.04.0134		1N3595	D 1N 3595, FDH 300,
0	D 3	50.04.0134		1N3595	D 1N 3595, FDH 300,
0	DL 1	50.04.2751		grn	LED mit Halter, grün
0	DL 2	50.04.2751		grn	LED mit Halter, grün
0	DL 3	50.04.2751		grn	LED mit Halter, grün
0	DL 4	50.04.2751		grn	LED mit Halter, grün
0	DL 5	50.04.2752		yel	LED mit Halter, gelb
0	DL 6	50.04.2752		yel	LED mit Halter, gelb
0	DL 7	50.04.2752		yel	LED mit Halter, gelb
0	IC 1	50.13.0201		CS8411	AES/EBU Receiver
0	IC 2	50.17.0000		74HCT00	IC .. 74 HCT 00 ., ,A
0	IC 3	50.17.1153		74HC153	IC ... 74 HC 153 ., ,A
0	IC 4	50.13.0201		CS8411	AES/EBU Receiver
0	IC 5	50.13.0202		CS8412	IC CS 8412-CP ,A
0	IC 6	50.14.2103		HY93C46S	EEPROM 64 * 16, serial
0	IC 7	50.63.0009		80C552	8bit microcontroller
0	IC 8	50.11.1002		LM360	High speed Comparator
0	IC 9	50.11.0159		MAX1232	IC MAX 1232 CPA, DS 1232
0	IC 10	50.11.1002		LM360	High speed Comparator
0	IC 11	50.10.0124		MAX660	V-Converter ... +5.5V to -5.5V
0	IC 12	50.17.7032		ACT32	.. 74 ACT 32 .
0	IC 13	50.06.0595		74LS595	IC SN 74 LS 595 N
0	IC 14	50.06.0595		74LS595	IC SN 74 LS 595 N
0	IC 15	50.17.0138		74HCT138	IC .. 74 HCT138 ., ,A
0	IC 16	50.17.1541		74HC541	IC ... 74 HC 541 ., ,A
0	IC 17	50.11.1002		LM360	High speed Comparator
0	IC 18	50.17.1008		74HC08	IC ... 74 HC 08 ., ,A
0	IC 19	50.17.0573		74HCT573	IC .. 74 HCT573 ., ,A
0	IC 20	50.17.1904		74HCU04	IC ... 74 HCU 04 ., ,A
0	IC 21	50.17.0004		74HCT04	IC .. 74 HCT 04 ., ,A
0	IC 22	50.15.0127		34C87	IC DS 34 C 87 TN, MC34C87P ,A
0	IC 23	50.13.0204			IC AD 1890 JN ,A
0	IC 24	50.17.1273		74HC273	IC ... 74 HC 273 ., ,A
0	IC 25	50.17.1273		74HC273	IC ... 74 HC 273 ., ,A
0	IC 26	50.13.0204			IC AD 1890 JN ,A
0	IC 27	1.940.951.21			SW 540 SFCON (50.18.0104)
0	IC 28	1.940.952.21			SW 540 SFCUP (50.14.2004)
0	IC 29	50.63.1702		CY7C130	IC CY7C 130 - 45 LC ,A
0	IC 30	1.940.950.22			SW 540 SAFCON (50.63.4205)
0	IC 31	50.15.0127		34C87	IC DS 34 C 87 TN, MC34C87P ,A
0	IC 32	50.14.0133		5565	IC HM 6264LP-15 ,A
0	J 1	53.03.0219			single-in-line
0	J 2	53.03.0219			single-in-line
0	J 3	53.03.0219			single-in-line
0	J 4	53.03.0219			single-in-line
0	J 5	53.03.0219			single-in-line
0	J 6	53.03.0219			single-in-line
0	J 7	53.03.0219			single-in-line
0	J 8	53.03.0219			single-in-line
0	J 9	53.03.0219			single-in-line
0	J 10	53.03.0219			single-in-line
0	J 11	53.03.0219			single-in-line
0	J 12	53.03.0219			single-in-line
0	J 13	53.03.0219			single-in-line
0	J 14	53.03.0219			single-in-line
0	J 15	53.03.0219			single-in-line
0	J 16	53.03.0219			single-in-line
0	J 17	53.03.0219			single-in-line
0	J 18	53.03.0219			single-in-line
0	J 19	53.03.0219			single-in-line
0	J 20	53.03.0219			single-in-line
0	J 21	53.03.0219			single-in-line
0	J 22	53.03.0219			single-in-line
0	J 23	53.03.0219			single-in-line
0	J 24	53.03.0219			single-in-line
0	J 25	53.03.0219			single-in-line
0	J 26	53.03.0219			single-in-line
0	J 27	53.03.0219			single-in-line
0	J 28	54.01.0021		Jumper	0.63 * 0.63mm
0	J 29	54.01.0021		Jumper	0.63 * 0.63mm
0	J 30	54.01.0021		Jumper	0.63 * 0.63mm
0	J 31	54.01.0021		Jumper	0.63 * 0.63mm
0	J 32	54.01.0021		Jumper	0.63 * 0.63mm
0	JP 1	54.01.0020		1p	Pin 0.63*0.63
0	JP 2	54.01.0020		1p	Pin 0.63*0.63
0	JP 3	54.01.0020		1p	Pin 0.63*0.63
0	JP 4	54.11.0136		2*3p	Pin 0.63*0.63, RM2.54
0	JP 5	54.11.0136		2*3p	Pin 0.63*0.63, RM2.54
0	L 1	62.02.3220		22uH	10%, radial RM 5
0	L 2	62.02.3220		22uH	10%, radial RM 5
0	L 3	62.02.3220		22uH	10%, radial RM 5
0	MP 1	1.940.540.11			D19M SFC PCB
0	MP 2	1.010.057.43			Baugruppenschild
0	MP 3	43.01.0108		Label	ESE-WARNSCHILD
0	MP 4	1.101.001.22			TEXT-ETIK. 5*20 HARDWARE -22
0	MP 5	89.01.1499	4 pcs		QUARZ - ISOLIERPLATTE
0	MP 10	1.940.540.01	1 pce		FRONTPLATTE
0	MP 11	1.940.600.04	1 pce		GRIFFEINLAGE 4TE
0	MP 12	49.02.0520	2 pcs	M2.5*12	Rändelschraube (Rack)
0	MP 13	49.02.0521	2 pcs		Metall-Buchse (Rack)
0	MP 14	49.02.0522	2 pcs		Kartenhalter (Rack)
0	MP 15	49.02.0523	1 pce	M2.5*7	Senk-Schr, KS, Senkripp
0	MP 16	49.02.0504	1 pce	4TE	Frontplatten-Griff
0	MP 17	21.53.0279	2 pcs		Z - SCHR. IS , ZN , M2.5 * 6
0	MP 18	21.53.0284	1 pce		Z - SCHR. IS , ZN , M2.5 * 16
0	MP 19	28.99.0119	2 pcs		ROHRNIETE D 2.5*0.15* 9
0	P 1	54.11.2009		96p	EU-R 3*32p
0	Q 1	50.03.0407		BC550C	BC 550 C
0	R 1	57.92.7053		1.6A	POLY- PTC, 30V
0	R 2	57.11.3823		82k	MF, 1%, 0207
0	R 3	57.11.3470		47R	MF, 1%, 0207
0	R 4	57.11.3823		82k	MF, 1%, 0207
0	R 5	57.11.3470		47R	MF, 1%, 0207
0	R 6	57.11.3823		82k	MF, 1%, 0207
0	R 7	57.11.3103		10k	MF, 1%, 0207
0	R 8	57.11.3103		10k	MF, 1%, 0207
0	R 9	57.11.3103		10k	MF, 1%, 0207
0	R 10	57.11.3471		470R	MF, 1%, 0207
0	R 11	not used		470R	MF, 1%, 0207
0	R 12	57.11.3150		15R	MF, 1%, 0207
0	R 13	57.11.3150		15R	MF, 1%, 0207
0	R 14	57.11.3271		270R	MF, 1%, 0207
0	R 15	57.11.3102		1k0	MF, 1%, 0207
0	R 16	57.11.3103		10k	MF, 1%, 0207
0	R 17	57.11.3102		1k0	MF, 1%, 0207
0	R 18	57.11.3470		47R	MF, 1%, 0207
0	R 19	57.11.3103		10k	MF, 1%, 0207
0	R 20	57.11.3103		10k	MF, 1%, 0207
0	R 21	57.11.3471		470R	MF, 1%, 0207
0	R 22	57.11.3271		270R	MF, 1%, 0207
0	R 23	57.11.3271		270R	MF, 1%, 0207
0	R 24	57.11.3102		1k0	MF, 1%, 0207
0	R 25	57.11.3332		3k3	MF, 1%, 0207
0	R 26	57.11.3332		3k3	MF, 1%, 0207
0	R 27	57.11.3103		10k	MF, 1%, 0207
0	R 28	57.11.3103		10k	MF, 1%, 0207
0	R 29	57.11.3103		10k	MF, 1%, 0207
0	R 30	not used		470R	MF, 1%, 0207
0	R 31	57.11.3150		15R	MF, 1%, 0207
0	R 32	57.11.3150		15R	MF, 1%, 0207
0	R 33	57.11.3271		270R	MF, 1%, 0207
0	R 34	57.11.3102		1k0	MF, 1%, 0207
0	R 35	57.11.3102		1k0	MF, 1%, 0207
0	R 36	57.11.3102		1k0	MF, 1%, 0207
0	R 37	57.11.3103		10k	MF, 1%, 0207
0	R 38	57.11.3103		10k	MF, 1%, 0207
0	R 39	57.11.3103		10k	MF, 1%, 0207
0	R 40	57.11.3103		10k	MF, 1%, 0207
0	R 41	not used		470R	MF, 1%, 0207
0	R 42	57.11.3471		470R	MF, 1%, 0207
0	R 43	57.11.3150		15R	MF, 1%, 0207
0	R 44	57.11.3271		270R	MF, 1%, 0207
0	R 45	57.11.3271		270R	MF, 1%, 0207
0	R 46	57.11.3150		15R	MF, 1%, 0207
0	R 47	57.11.3472		4k7	MF, 1%, 0207
0	R 48	57.11.3103		10k	MF, 1%, 0207
0	R 49	57.11.3223		22k	MF, 1%, 0207
0	R 50	57.11.3105		1M0	MF, 1%, 0207
0	R 51	57.11.3102		1k0	MF, 1%, 0207
0	R 52	57.11.3105		1M0	MF, 1%, 0207
0	R 53	57.11.3105		1M0	MF, 1%, 0207
0	R 54	57.11.3470		47R	MF, 1%, 0207
0	R 55	57.11.3102		1k0	MF, 1%, 0207
0	R 56	57.11.3102		1k0	MF, 1%, 0207
0	R 57	57.11.3102		1k0	MF, 1%, 0207
0	R 58	57.11.3470		47R	MF, 1%, 0207
0	R 59	57.11.3102		1k0	MF, 1%, 0207
0	R 60	57.11.3102		1k0	MF, 1%, 0207
0	R 61	57.11.3470		47R	MF, 1%, 0207
0	R 62	57.11.3333		33k	MF, 1%, 0207
0	R 63	57.11.3333		33k	MF, 1%, 0207
0	R 64	57.11.3470		47R	MF, 1%, 0207
0	R 101	57.11.3103		10k	MF, 1%, 0207
0	RZ 1	57.88.4332		8*3k3	2%, SIP 9
0	RZ 2	57.88.4223		8*22k	2%, SIP 9
0	RZ 3	57.88.4102		8*1k	2%, SIP 9
0	S 1	5511.0203		SPST	Toggle on - off - on
0	S 2	55.15.0138		1*A	S 1 TASTE, 1*A,IMPULS,1.0 N
0	T 1	63.15.0001			IMPULSTRANSFORMATOR
0	T 2	63.15.0001			IMPULSTRANSFORMATOR
0	T 3	63.15.0001			IMPULSTRANSFORMATOR
0	T 4	1.022.647.00		1:1.4	OUTPUT TRAFO AES/EBU
0	T 5	1.022.647.00		1:1.4	OUTPUT TRAFO AES/EBU
0	T 6	1.022.647.00		1:1.4	OUTPUT TRAFO AES/EBU
0	T 7	1.022.647.00		1:1.4	OUTPUT TRAFO AES/EBU
0	TP 1	54.02.0320		1p	Flatpin, 2.8*0.8mm
0	TP 2	54.02.0320		1p	Flatpin, 2.8*0.8mm
0	W 1	64.01.0106	3 mm		SCHALTDRAHT SN D 0.6
0	XIC 7	53.03.2244		PLCC44p	PLCC-Socket 44p
0	XIC 13	53.03.0168		16p	DIL 0.3", löt, gerade
0	XIC 14	53.03.0168		16p	DIL 0.3", löt, gerade
0	XIC 22	53.03.0168		16p	DIL 0.3", löt, gerade
0	XIC 27	53.03.0182		24p	DIL 0.3", löt, gerade
0	XIC 28	53.03.0173		28p	DIL 0.6", löt, gerade
0	XIC 29	53.03.2252		PLCC52p	PLCC-Socket 52p
0	XIC 30	53.03.2284		PLCC84p	PLCC-Socket 84p
0	XIC 31	53.03.0168		16p	DIL 0.3", löt, gerade
0	Y 1	89.01.1014		12.000MHz	12.000 000 MHz, HC 49/U
0	Y 2	89.01.1010		24.576MHz	24.576 000 MHz, HC 18/U
0	Y 3	89.01.1012		22.5792MHz	22.579 200 MHz, HC 49/U
0	Y 4	89.01.1009		16.000MHz	16.000 000 MHz, HC 49/U

End of List

Comments:
IC Sockel XIC nn entsprechend den IC Nummern bestückt

D19M 24 Bit AD Board 1.940.562.20
D19M 24 Bit AD / ND Board 1.940.563.20

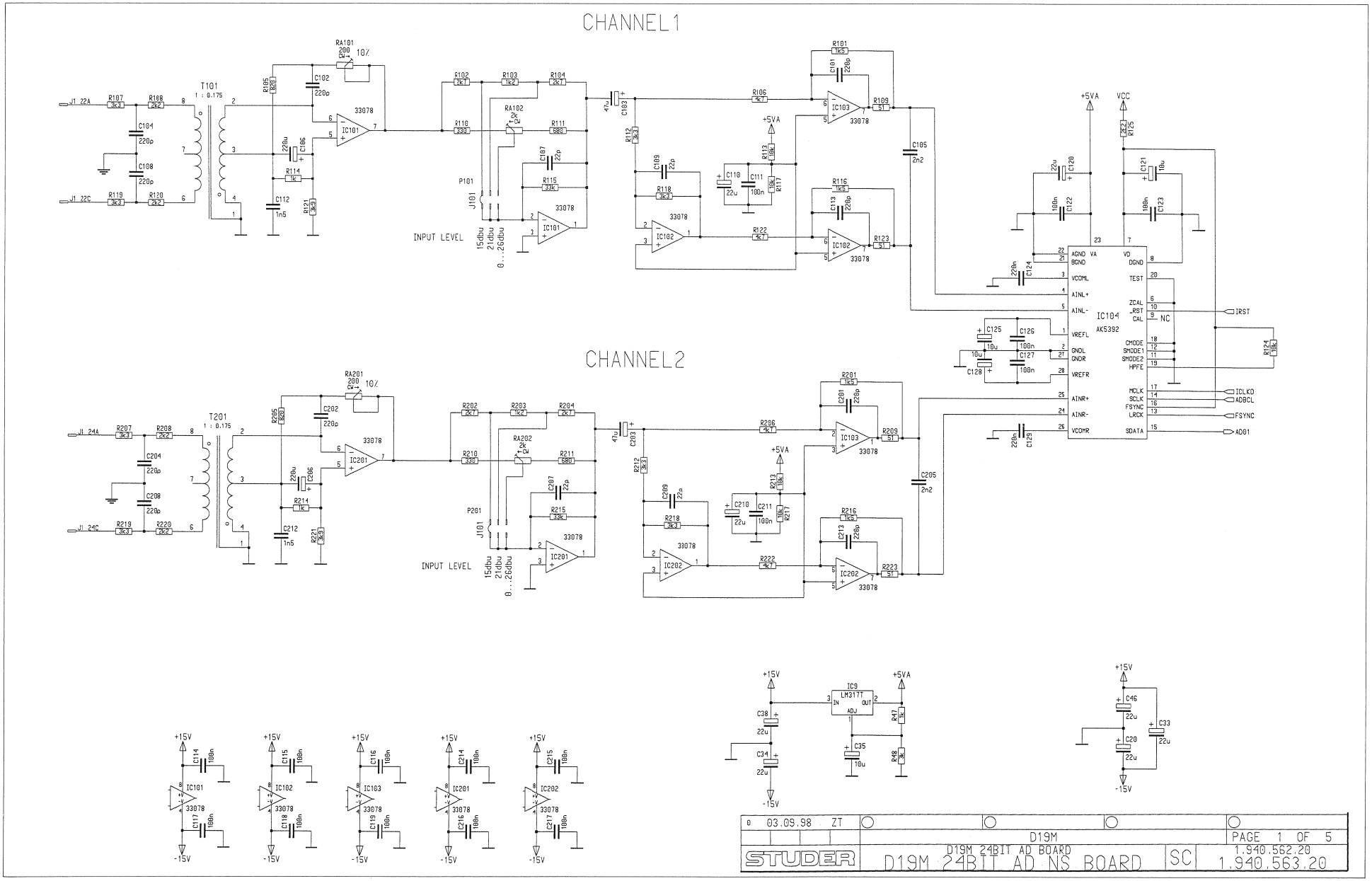

D19M 24 Bit AD Board 1.940.562.20
D19M 24 Bit AD / ND Board 1.940.563.20

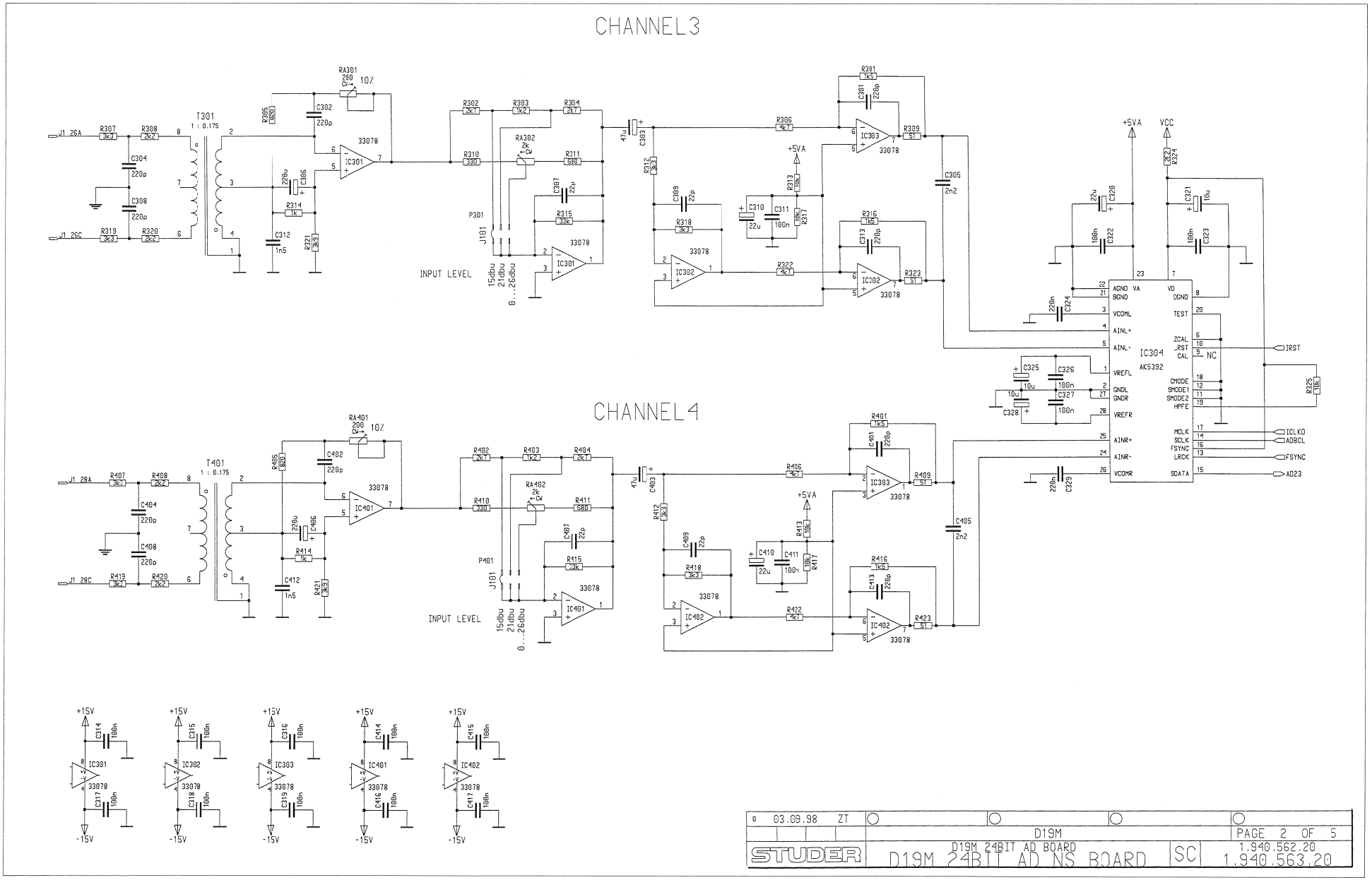

D19M 24 Bit AD Board 1.940.562.20
D19M 24 Bit AD / ND Board 1.940.563.20

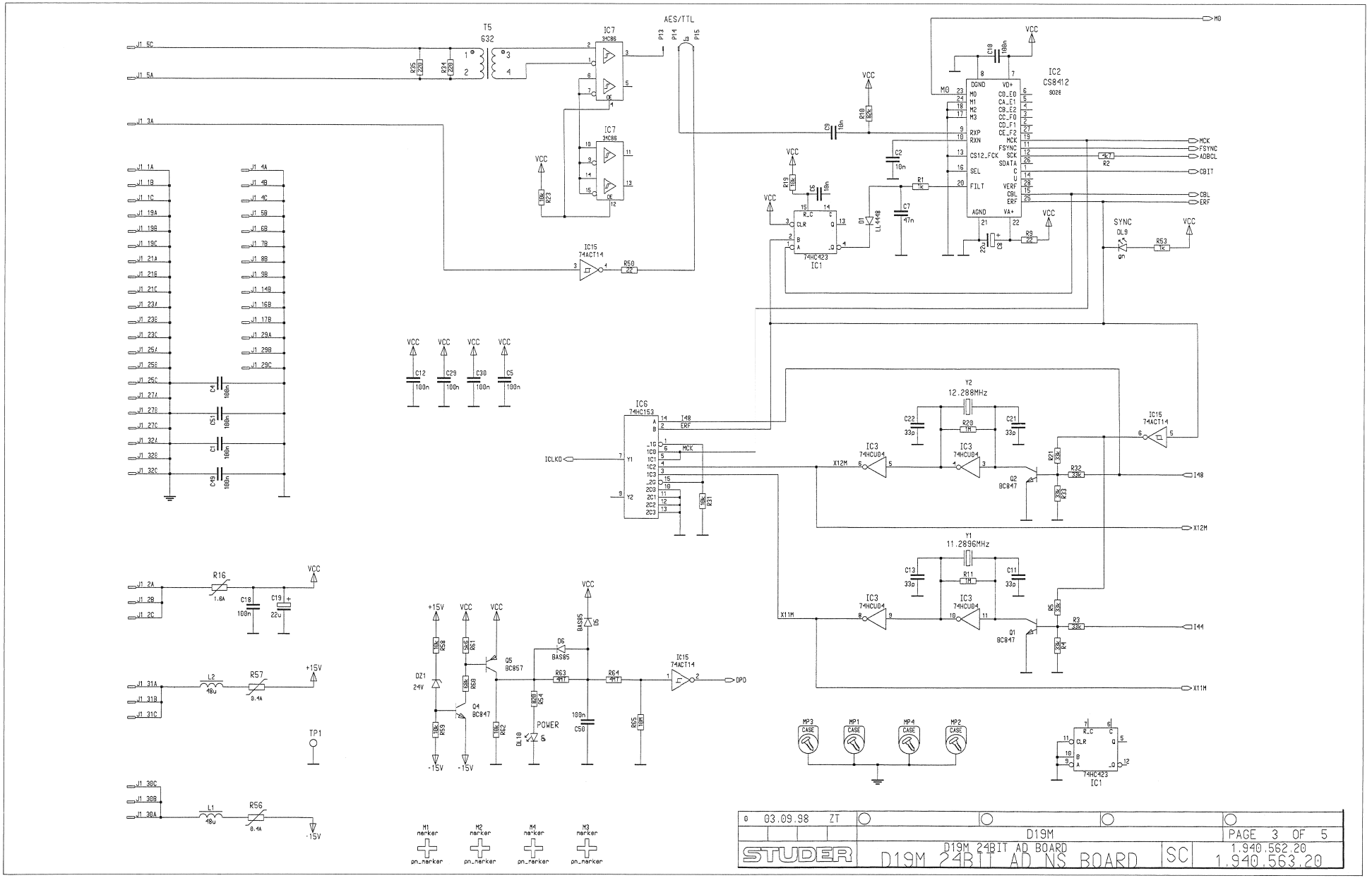

0 03.09.98 ZT			
	D19M		PAGE 3 OF 5
STUDER	D19M 24BIT AD BOARD D19M 24BIT AD NS BOARD	SC	1.940.562.20 1.940.563.20

D19M 24 Bit AD Board 1.940.562.20
D19M 24 Bit AD / ND Board 1.940.563.20

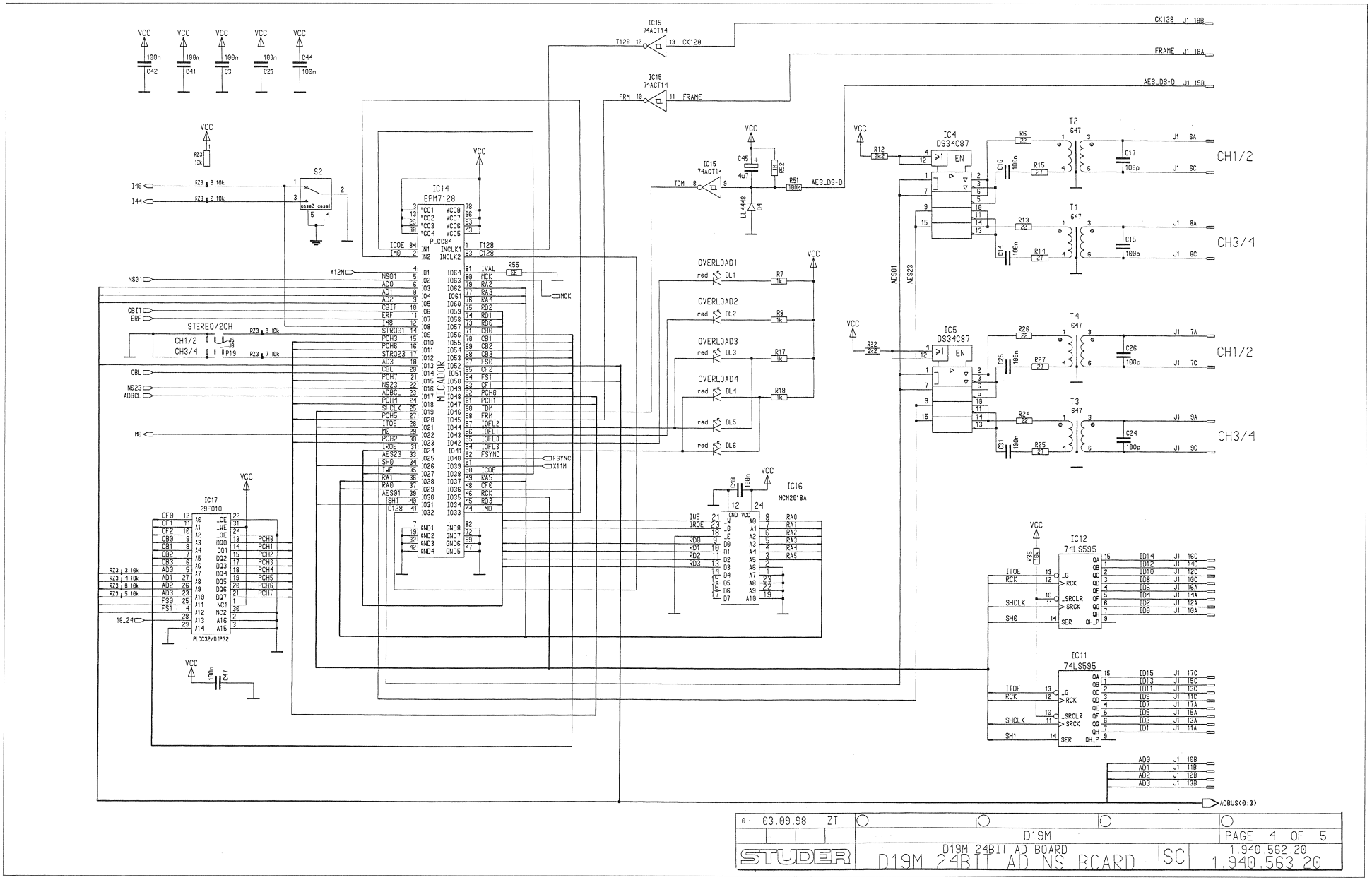

D19M 24 Bit AD Board 1.940.562.20
D19M 24 Bit AD / ND Board 1.940.563.20

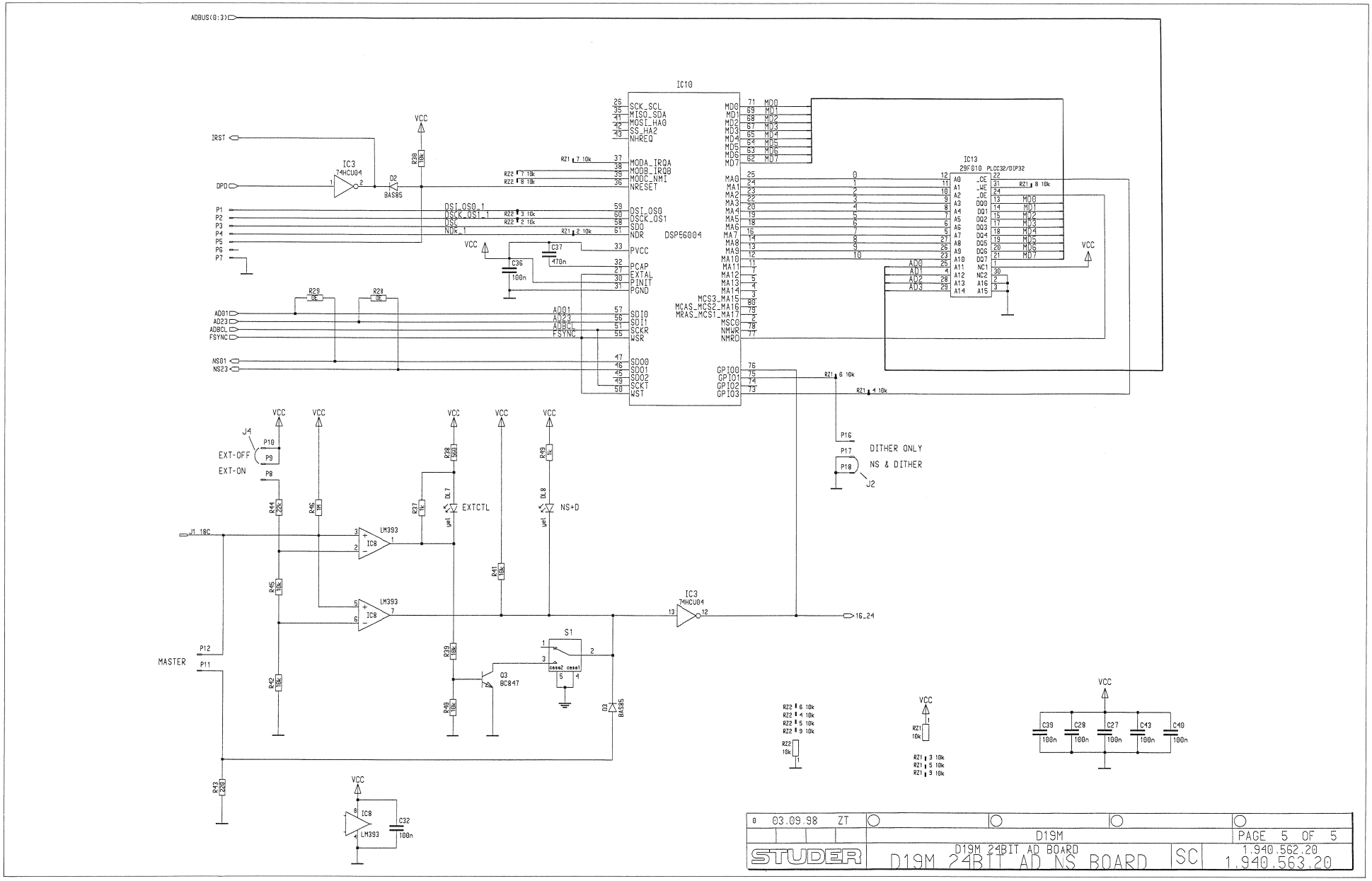

0 03.09.98 ZT				
	D19M			PAGE 5 OF 5
STUDER	D19M 24BIT AD BOARD	D19M 24BIT AD NS BOARD	SC	1.940.562.20 1.940.563.20

D19M 24 Bit AD Board 1.940.562.20
D19M 24 Bit AD / ND Board 1.940.563.20

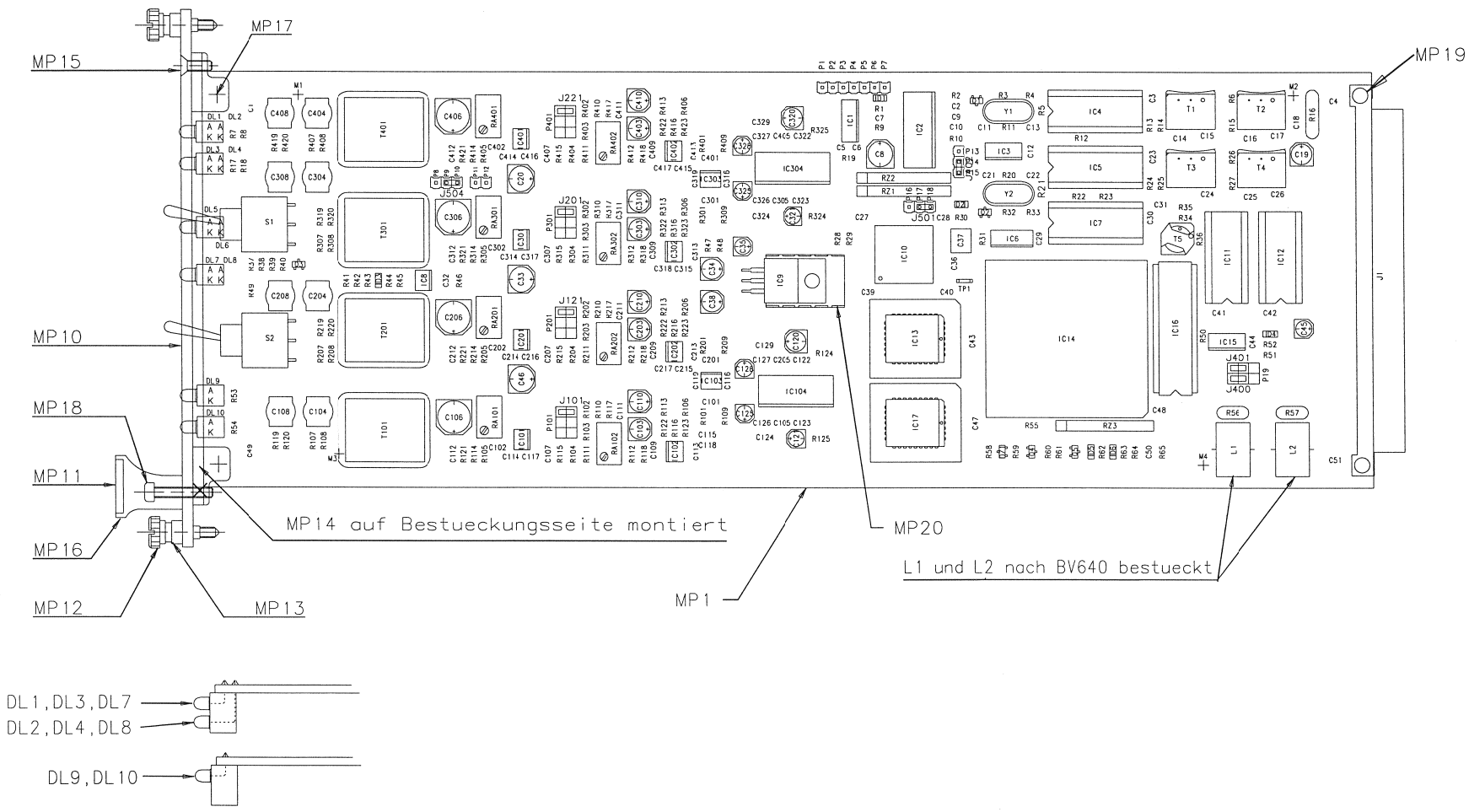

Modification Aenderung					③
					②
					①
Edition Ausgabe	15.05.98	ZT			⓪
	Date Datum	Visa Gez.	Checked Gepr.	Seen Ges.	Index

Copy to:
Kopie fuer: -

STUDER REGENSDORF

Description: Benennung: D19M C4 AD BOARD 'ESE'
D19M C4 AD NS BOARD 'ESE'

Number: Nummer: 1.940.562.20
1.940.563.20

D19M 24 Bit AD Board 1.940.562.20

Idx	Pos.	Part No.	Qty.	Type/Val.	Description
0	C 1	59.60.3337		100n	CER 50V, 10%, X7R, 0805
0	C 2	59.60.3325		10n	CER 50V, 10%, X7R, 0805
0	C 3	59.60.3337		100n	CER 50V, 10%, X7R, 0805
0	C 4	59.60.3337		100n	CER 50V, 10%, X7R, 0805
0	C 5	59.60.3337		100n	CER 50V, 10%, X7R, 0805
0	C 6	59.60.3325		10n	CER 50V, 10%, X7R, 0805
0	C 7	59.60.3333		47n	CER 50V, 10%, X7R, 0805
0	C 8	59.68.0111		22u	C-EL 35V, 6.3*5.7
0	C 9	59.60.3325		10n	CER 50V, 10%, X7R, 0805
0	C 10	59.60.3337		100n	CER 50V, 10%, X7R, 0805
0	C 11	59.60.2237		33p	CER 50V, 5%, C0G, 0603
0	C 12	59.60.3337		100n	CER 50V, 10%, X7R, 0805
0	C 13	59.60.2237		33p	CER 50V, 5%, C0G, 0603
0	C 14	59.60.3337		100n	CER 50V, 10%, X7R, 0805
0	C 15	59.60.2249		100p	CER 50V, 5%, C0G, 0603
0	C 16	59.60.3337		100n	CER 50V, 10%, X7R, 0805
0	C 17	59.60.2249		100p	CER 50V, 5%, C0G, 0603
0	C 18	59.60.3337		100n	CER 50V, 10%, X7R, 0805
0	C 19	59.68.0067		22u	C-EL 16V, 5.0*5.7
0	C 20	59.68.0111		22u	C-EL 35V, 6.3*5.7
0	C 21	59.60.2237		33p	CER 50V, 5%, C0G, 0603
0	C 22	59.60.2237		33p	CER 50V, 5%, C0G, 0603
0	C 23	59.60.3337		100n	CER 50V, 10%, X7R, 0805
0	C 24	59.60.2249		100p	CER 50V, 5%, C0G, 0603
0	C 25	59.60.3337		100n	CER 50V, 10%, X7R, 0805
0	C 26	59.60.2249		100p	CER 50V, 5%, C0G, 0603
0	C 27	59.60.3337		100n	CER 50V, 10%, X7R, 0805
0	C 28	59.60.3337		100n	CER 50V, 10%, X7R, 0805
0	C 29	59.60.3337		100n	CER 50V, 10%, X7R, 0805
0	C 30	59.60.3337		100n	CER 50V, 10%, X7R, 0805
0	C 31	59.60.3337		100n	CER 50V, 10%, X7R, 0805
0	C 32	59.60.3337		100n	CER 50V, 10%, X7R, 0805
0	C 33	59.68.0111		22u	C-EL 35V, 6.3*5.7
0	C 34	59.68.0067		22u	C-EL 16V, 5.0*5.7
0	C 35	59.68.0065		10u	C-EL 16V, 4.0*5.7
0	C 36	not used		100n	CER 50V, 10%, X7R, 0805
0	C 37	not used		470n	CER 50V, 10%, X7R, 2220
0	C 38	59.68.0067		22u	C-EL 16V, 5.0*5.7
0	C 39	59.60.3337		100n	CER 50V, 10%, X7R, 0805
0	C 40	59.60.3337		100n	CER 50V, 10%, X7R, 0805
0	C 41	59.60.3337		100n	CER 50V, 10%, X7R, 0805
0	C 42	59.60.3337		100n	CER 50V, 10%, X7R, 0805
0	C 43	59.60.3337		100n	CER 50V, 10%, X7R, 0805
0	C 44	59.60.3337		100n	CER 50V, 10%, X7R, 0805
0	C 45	59.68.0107		4u7	C-EL 35V, 4.0*5.7
0	C 46	59.68.0111		22u	C-EL 35V, 6.3*5.7
0	C 47	59.60.3337		100n	CER 50V, 10%, X7R, 0805
0	C 48	59.60.3337		100n	CER 50V, 10%, X7R, 0805
0	C 49	59.60.3337		100n	CER 50V, 10%, X7R, 0805
0	C 50	59.60.3337		100n	CER 50V, 10%, X7R, 0805
0	C 51	59.60.3337		100n	CER 50V, 10%, X7R, 0805
0	C 101	59.60.2257		220p	CER 50V, 5%, C0G, 0603
0	C 102	59.60.2257		220p	CER 50V, 5%, C0G, 0603
0	C 103	59.68.0027		47u	C-EL 6V, 5.0*5.7
0	C 104	59.05.1221		220p	PP, 1%, 630V
0	C 105	59.60.3317		2n2	CER 50V, 10%, X7R, 0805
0	C 106	59.68.0073		220u	C-EL 16V, 8.0*10.7
0	C 107	59.60.2233		22p	CER 50V, 5%, C0G, 0603
0	C 108	59.05.1221		220p	PP, 1%, 630V
0	C 109	59.60.2233		22p	CER 50V, 5%, C0G, 0603
0	C 110	59.68.0067		22u	C-EL 16V, 5.0*5.7
0	C 111	59.60.3337		100n	CER 50V, 10%, X7R, 0805
0	C 112	59.60.3315		1n5	CER 50V, 10%, X7R, 0805
0	C 113	59.60.2257		220p	CER 50V, 5%, C0G, 0603
0	C 114	59.60.3337		100n	CER 50V, 10%, X7R, 0805
0	C 115	59.60.3337		100n	CER 50V, 10%, X7R, 0805
0	C 116	59.60.3337		100n	CER 50V, 10%, X7R, 0805
0	C 117	59.60.3337		100n	CER 50V, 10%, X7R, 0805
0	C 118	59.60.3337		100n	CER 50V, 10%, X7R, 0805
0	C 119	59.60.3337		100n	CER 50V, 10%, X7R, 0805
0	C 120	59.68.0067		22u	C-EL 16V, 5.0*5.7
0	C 121	59.68.0065		10u	C-EL 16V, 4.0*5.7
0	C 122	59.60.3337		100n	CER 50V, 10%, X7R, 0805
0	C 123	59.60.3337		100n	CER 50V, 10%, X7R, 0805
0	C 124	59.60.3441		220n	CER 50V, 10%, X7R, 1206
0	C 125	59.68.0065		10u	C-EL 16V, 4.0*5.7
0	C 126	59.60.3337		100n	CER 50V, 10%, X7R, 0805
0	C 127	59.60.3337		100n	CER 50V, 10%, X7R, 0805
0	C 128	59.68.0065		10u	C-EL 16V, 4.0*5.7
0	C 129	59.60.3441		220n	CER 50V, 10%, X7R, 1206
0	C 201	59.60.2257		220p	CER 50V, 5%, C0G, 0603
0	C 202	59.60.2257		220p	CER 50V, 5%, C0G, 0603
0	C 203	59.68.0027		47u	C-EL 6V, 5.0*5.7
0	C 204	59.05.1221		220p	PP, 1%, 630V
0	C 205	59.60.3317		2n2	CER 50V, 10%, X7R, 0805
0	C 206	59.68.0073		220u	C-EL 16V, 8.0*10.7
0	C 207	59.60.2233		22p	CER 50V, 5%, C0G, 0603
0	C 208	59.05.1221		220p	PP, 1%, 630V
0	C 209	59.60.2233		22p	CER 50V, 5%, C0G, 0603
0	C 210	59.68.0067		22u	C-EL 16V, 5.0*5.7
0	C 211	59.60.3337		100n	CER 50V, 10%, X7R, 0805
0	C 212	59.60.3315		1n5	CER 50V, 10%, X7R, 0805
0	C 213	59.60.2257		220p	CER 50V, 5%, C0G, 0603
0	C 214	59.60.3337		100n	CER 50V, 10%, X7R, 0805
0	C 215	59.60.3337		100n	CER 50V, 10%, X7R, 0805
0	C 216	59.60.3337		100n	CER 50V, 10%, X7R, 0805
0	C 217	59.60.3337		100n	CER 50V, 10%, X7R, 0805
0	C 301	59.60.2257		220p	CER 50V, 5%, C0G, 0603
0	C 302	59.60.2257		220p	CER 50V, 5%, C0G, 0603
0	C 303	59.68.0027		47u	C-EL 6V, 5.0*5.7
0	C 304	59.05.1221		220p	PP, 1%, 630V
0	C 305	59.60.3317		2n2	CER 50V, 10%, X7R, 0805
0	C 306	59.68.0073		220u	C-EL 16V, 8.0*10.7
0	C 307	59.60.2233		22p	CER 50V, 5%, C0G, 0603
0	C 308	59.05.1221		220p	PP, 1%, 630V
0	C 309	59.60.2233		22p	CER 50V, 5%, C0G, 0603
0	C 310	59.68.0067		22u	C-EL 16V, 5.0*5.7
0	C 311	59.60.3337		100n	CER 50V, 10%, X7R, 0805
0	C 312	59.60.3315		1n5	CER 50V, 10%, X7R, 0805
0	C 313	59.60.2257		220p	CER 50V, 5%, C0G, 0603
0	C 314	59.60.3337		100n	CER 50V, 10%, X7R, 0805
0	C 315	59.60.3337		100n	CER 50V, 10%, X7R, 0805
0	C 316	59.60.3337		100n	CER 50V, 10%, X7R, 0805
0	C 317	59.60.3337		100n	CER 50V, 10%, X7R, 0805
0	C 318	59.60.3337		100n	CER 50V, 10%, X7R, 0805
0	C 319	59.60.3337		100n	CER 50V, 10%, X7R, 0805
0	C 320	59.68.0067		22u	C-EL 16V, 5.0*5.7
0	C 321	59.68.0065		10u	C-EL 16V, 4.0*5.7
0	C 322	59.60.3337		100n	CER 50V, 10%, X7R, 0805
0	C 323	59.60.3337		100n	CER 50V, 10%, X7R, 0805
0	C 324	59.60.3441		220n	CER 50V, 10%, X7R, 1206
0	C 325	59.68.0065		10u	C-EL 16V, 4.0*5.7
0	C 326	59.60.3337		100n	CER 50V, 10%, X7R, 0805
0	C 327	59.60.3337		100n	CER 50V, 10%, X7R, 0805
0	C 328	59.68.0065		10u	C-EL 16V, 4.0*5.7
0	C 329	59.60.3441		220n	CER 50V, 10%, X7R, 1206
0	C 401	59.60.2257		220p	CER 50V, 5%, C0G, 0603
0	C 402	59.60.2257		220p	CER 50V, 5%, C0G, 0603
0	C 403	59.68.0027		47u	C-EL 6V, 5.0*5.7
0	C 404	59.05.1221		220p	PP, 1%, 630V
0	C 405	59.60.3317		2n2	CER 50V, 10%, X7R, 0805
0	C 406	59.68.0073		220u	C-EL 16V, 8.0*10.7
0	C 407	59.60.2233		22p	CER 50V, 5%, C0G, 0603
0	C 408	59.05.1221		220p	PP, 1%, 630V
0	C 409	59.60.2233		22p	CER 50V, 5%, C0G, 0603
0	C 410	59.68.0067		22u	C-EL 16V, 5.0*5.7
0	C 411	59.60.3337		100n	CER 50V, 10%, X7R, 0805
0	C 412	59.60.3315		1n5	CER 50V, 10%, X7R, 0805
0	C 413	59.60.2257		220p	CER 50V, 5%, C0G, 0603
0	C 414	59.60.3337		100n	CER 50V, 10%, X7R, 0805
0	C 415	59.60.3337		100n	CER 50V, 10%, X7R, 0805
0	C 416	59.60.3337		100n	CER 50V, 10%, X7R, 0805
0	C 417	59.60.3337		100n	CER 50V, 10%, X7R, 0805
0	D 1	50.60.8001		4448	200mA 75V 4ns SOD 80
0	D 2	not used		BAS85	200mA 30V Schottky SOD 80
0	D 3	not used		BAS85	200mA 30V Schottky SOD 80
0	D 4	50.60.8001		4448	200mA 75V 4ns SOD 80
0	D 5	50.60.8101		BAS85	200mA 30V Schottky SOD 80
0	D 6	50.60.8101		BAS85	200mA 30V Schottky SOD 80
0	DL 1	50.04.2200		HLMP1700	DL HLMP - 1700 RT
0	DL 2	50.04.2200		HLMP1700	DL HLMP - 1700 RT
0	DL 3	not used		HLMP1700	DL HLMP - 1700 RT
0	DL 4	not used		HLMP1700	DL HLMP - 1700 RT
0	DL 5	50.04.2200		HLMP1700	DL HLMP - 1700 RT
0	DL 6	50.04.2200		HLMP1700	DL HLMP - 1700 RT
0	DL 7	not used		HLMP1719	DL HLMP - 1719 GB
0	DL 8	not used		HLMP1790	DL HLMP - 1790 GN
0	DL 9	50.04.2202		HLMP1790	DL HLMP - 1790 GN
0	DL 10	50.04.2202		HLMP1790	DL HLMP - 1790 GN
0	DZ 1	50.60.9026		24V	5%, 0.2W, SOT 23
0	IC 1	50.62.1423		74HC423	Dual multivibr monost retrigg
0	IC 2	50.62.0913		CS8412	AES-Receiver
0	IC 3	50.62.1904		74HCU04	Hex inverter unbuffered
0	IC 4	50.15.0127		34C87	IC DS 34 C 87 TN, MC34C87P ,A
0	IC 5	50.15.0127		34C87	IC DS 34 C 87 TN, MC34C87P ,A
0	IC 6	50.62.1153		74HC153	Dual 4ch multiplexer
0	IC 7	50.15.0128		34C86	IC DS 34 C 86 TN, MC34C86P ,A
0	IC 8	not used		LM393	Dual voltage comp. SO 8

D19M 24 Bit AD Board 1.940.562.20

Idx	Pos.	Part No.	Qty.	Type/Val.	Description
0	IC 9	50.10.0104		LM317SP	IC LM 317 SP, ..T,
0	IC 10	not used		56004	DSP 56 004 40MHz
0	IC 11	50.06.0595		74LS595	IC SN 74 LS 595 N
0	IC 12	50.06.0595		74LS595	IC SN 74 LS 595 N
0	IC 13	not used		29F010	Flash Memory 128K*8
0	IC 14	1.940.949.20			SW 562 MICADOR (50.63.4205)
0	IC 15	50.62.6014		74ACT 14	Hex inverting Schmitt trigger
0	IC 16	50.14.1009		7C128A	SRAM 2K*8 35ns
0	IC 17	1.940.948.20			SW 562 ADCBIT 24 (50.63.1303)
0	IC 101	50.61.0204		MC33078	Dual Op-Amp low noise
0	IC 102	50.61.0204		MC33078	Dual Op-Amp low noise
0	IC 103	50.61.0204		MC33078	Dual Op-Amp low noise
0	IC 104	50.61.8105		AK5392	Delta Sigma 24bit ADConv SOP28
0	IC 201	50.61.0204		MC33078	Dual Op-Amp low noise
0	IC 202	50.61.0204		MC33078	Dual Op-Amp low noise
0	IC 301	50.61.0204		MC33078	Dual Op-Amp low noise
0	IC 302	50.61.0204		MC33078	Dual Op-Amp low noise
0	IC 303	50.61.0204		MC33078	Dual Op-Amp low noise
0	IC 304	50.61.8105		AK5392	Delta Sigma 24bit ADConv SOP28
0	IC 401	50.61.0204		MC33078	Dual Op-Amp low noise
0	IC 402	50.61.0204		MC33078	Dual Op-Amp low noise
0	J 1	54.11.2009		96p	EU-R 3*32p
0	J 2	not used		Jumper	0.63 * 0.63mm
0	J 3	54.01.0021		Jumper	0.63 * 0.63mm
0	J 4	not used		Jumper	0.63 * 0.63mm
0	J 5	54.01.0021		Jumper	0.63 * 0.63mm
0	J 6	54.01.0021		Jumper	0.63 * 0.63mm
0	J 101	54.01.0021		Jumper	0.63 * 0.63mm
0	J 201	54.01.0021		Jumper	0.63 * 0.63mm
0	J 301	54.01.0021		Jumper	0.63 * 0.63mm
0	J 401	54.01.0021		Jumper	0.63 * 0.63mm
0	L 1	62.03.0010		48uH	2A Toroid Chocke
0	L 2	62.03.0010		48uH	2A Toroid Chocke
0	MP 1	1.940.562.11			D19M 24 BIT AD BOARD PCB
0	MP 2	1.940.562.04			TYPENSCHILD
0	MP 3	43.01.0108		Label	ESE-WARNSCHILD
0	MP 4	1.101.001.20		Label	TEXT-ETIK. 5*20 HARDWARE -20
0	MP 10	1.940.562.01	1 pce		FRONTPLATTE C4AD 24BIT
0	MP 11	1.940.600.04	1 pce		GRIFFEINLAGE 4TE
0	MP 12	49.02.0520	2 pcs	M2.5*12	Rändelschraube (Rack)
0	MP 13	49.02.0521	2 pcs		Metall-Buchse (Rack)
0	MP 14	49.02.0522	2 pcs		Kartenhalter (Rack)
0	MP 15	49.02.0523	1 pce	M2.5*7	Senk-Schr, KS, Senkripp
0	MP 16	49.02.0504	1 pce	4TE	Frontplatten-Griff
0	MP 17	21.53.0279	2 pcs	M2.5*6	Z-Schraube Inbus Zn gb chr
0	MP 18	21.53.0284	1 pce	M2.5*16	Z-Schraube Inbus Zn gb chr
0	MP 19	28.99.0119	2 pcs		ROHRNIETE D 2.5*0.15* 9
0	MP 20	50.20.3004			Kühlkörper, TO 220, horizontal
0	P 1	not used		1p	Pin 0.63*0.63
0	P 2	not used		1p	Pin 0.63*0.63
0	P 3	not used		1p	Pin 0.63*0.63
0	P 4	not used		1p	Pin 0.63*0.63
0	P 5	not used		1p	Pin 0.63*0.63
0	P 6	not used		1p	Pin 0.63*0.63
0	P 7	not used		1p	Pin 0.63*0.63
0	P 8	not used		1p	Pin 0.63*0.63
0	P 9	not used		1p	Pin 0.63*0.63
0	P 10	not used		1p	Pin 0.63*0.63
0	P 11	not used		1p	Pin 0.63*0.63
0	P 12	not used		1p	Pin 0.63*0.63
0	P 13	54.01.0020		1p	Pin 0.63*0.63
0	P 14	54.01.0020		1p	Pin 0.63*0.63
0	P 15	54.01.0020		1p	Pin 0.63*0.63
0	P 16	not used		1p	Pin 0.63*0.63
0	P 17	not used		1p	Pin 0.63*0.63
0	P 18	not used		1p	Pin 0.63*0.63
0	P 19	54.11.0136		2*3p	Pin 0.63*0.63, RM2.54
0	P 101	54.11.0136		2*3p	Pin 0.63*0.63, RM2.54
0	P 201	54.11.0136		2*3p	Pin 0.63*0.63, RM2.54
0	P 301	54.11.0136		2*3p	Pin 0.63*0.63, RM2.54
0	P 401	54.11.0136		2*3p	Pin 0.63*0.63, RM2.54
0	Q 1	50.60.0001		BC847B	NPN 45V 100mA SOT 23
0	Q 2	50.60.0001		BC847B	NPN 45V 100mA SOT 23
0	Q 3	not used		BC847B	NPN 45V 100mA SOT 23
0	Q 4	50.60.0001		BC847B	NPN 45V 100mA SOT 23
0	Q 5	50.60.1001		BC857B	PNP 45V 100mA SOT 23
0	R 1	57.60.1102		1K	MF, 1%, 0204, E24
0	R 2	57.60.1472		4K7	MF, 1%, 0204, E24
0	R 3	57.60.1333		33K	MF, 1%, 0204, E24
0	R 4	57.60.1333		33K	MF, 1%, 0204, E24
0	R 5	57.60.1333		33K	MF, 1%, 0204, E24
0	R 6	57.60.1220		22R	MF, 1%, 0204, E24
0	R 7	57.60.1102		1K	MF, 1%, 0204, E24
0	R 8	57.60.1102		1K	MF, 1%, 0204, E24
0	R 9	57.60.1220		22R	MF, 1%, 0204, E24
0	R 10	57.60.1823		82K	MF, 1%, 0204, E24
0	R 11	57.60.1105		1M	MF, 1%, 0204, E24
0	R 12	57.60.1222		2K2	MF, 1%, 0204, E24
0	R 13	57.60.1220		22R	MF, 1%, 0204, E24
0	R 14	57.60.1270		27R	MF, 1%, 0204, E24
0	R 15	57.60.1270		27R	MF, 1%, 0204, E24
0	R 16	57.92.7053		1.6A	POLY- PTC, 30V
0	R 17	57.60.1102		1K	MF, 1%, 0204, E24
0	R 18	57.60.1102		1K	MF, 1%, 0204, E24
0	R 19	57.60.1103		10K	MF, 1%, 0204, E24
0	R 20	57.60.1105		1M	MF, 1%, 0204, E24
0	R 21	57.60.1333		33K	MF, 1%, 0204, E24
0	R 22	57.60.1222		2K2	MF, 1%, 0204, E24
0	R 23	57.60.1103		10K	MF, 1%, 0204, E24
0	R 24	57.60.1220		22R	MF, 1%, 0204, E24
0	R 25	57.60.1270		27R	MF, 1%, 0204, E24
0	R 26	57.60.1220		22R	MF, 1%, 0204, E24
0	R 27	57.60.1270		27R	MF, 1%, 0204, E24
0	R 28	57.60.1000		0R0	MF, 0204
0	R 29	57.60.1000		0R0	MF, 0204
0	R 30	not used		10K	MF, 1%, 0204, E24
0	R 31	57.60.1103		10K	MF, 1%, 0204, E24
0	R 32	57.60.1333		33K	MF, 1%, 0204, E24
0	R 33	57.60.1333		33K	MF, 1%, 0204, E24
0	R 34	57.60.1221		220R	MF, 1%, 0204, E24
0	R 35	57.60.1221		220R	MF, 1%, 0204, E24
0	R 36	57.60.1103		10K	MF, 1%, 0204, E24
0	R 37	not used		1K	MF, 1%, 0204, E24
0	R 38	not used		560R	MF, 1%, 0204, E24
0	R 39	not used		10K	MF, 1%, 0204, E24
0	R 40	not used		10K	MF, 1%, 0204, E24
0	R 41	57.60.1103		10K	MF, 1%, 0204, E24
0	R 42	not used		10K	MF, 1%, 0204, E24
0	R 43	not used		220R	MF, 1%, 0204, E24
0	R 44	not used		22K	MF, 1%, 0204, E24
0	R 45	not used		10K	MF, 1%, 0204, E24
0	R 46	not used		1M	MF, 1%, 0204, E24
0	R 47	57.60.1102		1K	MF, 1%, 0204, E24
0	R 48	57.60.1302		3K0	MF, 1%, 0204, E24
0	R 49	not used		1K	MF, 1%, 0204, E24
0	R 50	57.60.1220		22R	MF, 1%, 0204, E24
0	R 51	57.60.1104		100K	MF, 1%, 0204, E24
0	R 52	57.60.1105		1M	MF, 1%, 0204, E24
0	R 53	57.60.1102		1K	MF, 1%, 0204, E24
0	R 54	57.60.1821		820R	MF, 1%, 0204, E24
0	R 55	57.60.1000		0R0	MF, 0204
0	R 56	57.92.7019		0.4A	POLY- PTC, 60V
0	R 57	57.92.7019		0.4A	POLY- PTC, 60V
0	R 58	57.60.1103		10K	MF, 1%, 0204, E24
0	R 59	57.60.1103		10K	MF, 1%, 0204, E24
0	R 60	57.60.1683		68K	MF, 1%, 0204, E24
0	R 61	57.60.1562		5K6	MF, 1%, 0204, E24
0	R 62	57.60.1103		10K	MF, 1%, 0204, E24
0	R 63	57.60.1475		4M7	MF, 1%, 0204, E24
0	R 64	57.60.1475		4M7	MF, 1%, 0204, E24
0	R 65	57.60.1106		10M	MF, 1%, 0204, E24
0	R 101	57.60.1152		1K5	MF, 1%, 0204, E24
0	R 102	57.60.1272		2K7	MF, 1%, 0204, E24
0	R 103	57.60.1122		1K2	MF, 1%, 0204, E24
0	R 104	57.60.1272		2K7	MF, 1%, 0204, E24
0	R 105	57.60.1821		820R	MF, 1%, 0204, E24
0	R 106	57.60.1472		4K7	MF, 1%, 0204, E24
0	R 107	57.60.1332		3K3	MF, 1%, 0204, E24
0	R 108	57.60.1222		2K2	MF, 1%, 0204, E24
0	R 109	57.60.1510		51R	MF, 1%, 0204, E24
0	R 110	57.60.1331		330R	MF, 1%, 0204, E24
0	R 111	57.60.1681		680R	MF, 1%, 0204, E24
0	R 112	57.60.1332		3K3	MF, 1%, 0204, E24
0	R 113	57.60.1103		10K	MF, 1%, 0204, E24
0	R 114	57.60.1102		1K	MF, 1%, 0204, E24
0	R 115	57.60.1333		33K	MF, 1%, 0204, E24
0	R 116	57.60.1152		1K5	MF, 1%, 0204, E24
0	R 117	57.60.1103		10K	MF, 1%, 0204, E24
0	R 118	57.60.1332		3K3	MF, 1%, 0204, E24
0	R 119	57.60.1332		3K3	MF, 1%, 0204, E24
0	R 120	57.60.1222		2K2	MF, 1%, 0204, E24
0	R 121	57.60.1392		3K9	MF, 1%, 0204, E24
0	R 122	57.60.1472		4K7	MF, 1%, 0204, E24
0	R 123	57.60.1510		51R	MF, 1%, 0204, E24
0	R 124	57.60.1103		10K	MF, 1%, 0204, E24
0	R 125	57.60.1229		2R2	MF, 1%, 0204, E24

D19M 24 Bit AD Board 1.940.562.20

Idx	Pos.	Part No.	Qty.	Type/Val.	Description
0	R 201	57.60.1152		1K5	MF, 1%, 0204, E24
0	R 202	57.60.1272		2K7	MF, 1%, 0204, E24
0	R 203	57.60.1122		1K2	MF, 1%, 0204, E24
0	R 204	57.60.1272		2K7	MF, 1%, 0204, E24
0	R 205	57.60.1821		820R	MF, 1%, 0204, E24
0	R 206	57.60.1472		4K7	MF, 1%, 0204, E24
0	R 207	57.60.1332		3K3	MF, 1%, 0204, E24
0	R 208	57.60.1222		2K2	MF, 1%, 0204, E24
0	R 209	57.60.1510		51R	MF, 1%, 0204, E24
0	R 210	57.60.1331		330R	MF, 1%, 0204, E24
0	R 211	57.60.1681		680R	MF, 1%, 0204, E24
0	R 212	57.60.1332		3K3	MF, 1%, 0204, E24
0	R 213	57.60.1103		10K	MF, 1%, 0204, E24
0	R 214	57.60.1102		1K	MF, 1%, 0204, E24
0	R 215	57.60.1333		33K	MF, 1%, 0204, E24
0	R 216	57.60.1152		1K5	MF, 1%, 0204, E24
0	R 217	57.60.1103		10K	MF, 1%, 0204, E24
0	R 218	57.60.1332		3K3	MF, 1%, 0204, E24
0	R 219	57.60.1332		3K3	MF, 1%, 0204, E24
0	R 220	57.60.1222		2K2	MF, 1%, 0204, E24
0	R 221	57.60.1392		3K9	MF, 1%, 0204, E24
0	R 222	57.60.1472		4K7	MF, 1%, 0204, E24
0	R 223	57.60.1510		51R	MF, 1%, 0204, E24
0	R 301	57.60.1152		1K5	MF, 1%, 0204, E24
0	R 302	57.60.1272		2K7	MF, 1%, 0204, E24
0	R 303	57.60.1122		1K2	MF, 1%, 0204, E24
0	R 304	57.60.1272		2K7	MF, 1%, 0204, E24
0	R 305	57.60.1821		820R	MF, 1%, 0204, E24
0	R 306	57.60.1472		4K7	MF, 1%, 0204, E24
0	R 307	57.60.1332		3K3	MF, 1%, 0204, E24
0	R 308	57.60.1222		2K2	MF, 1%, 0204, E24
0	R 309	57.60.1510		51R	MF, 1%, 0204, E24
0	R 310	57.60.1331		330R	MF, 1%, 0204, E24
0	R 311	57.60.1681		680R	MF, 1%, 0204, E24
0	R 312	57.60.1332		3K3	MF, 1%, 0204, E24
0	R 313	57.60.1103		10K	MF, 1%, 0204, E24
0	R 314	57.60.1102		1K	MF, 1%, 0204, E24
0	R 315	57.60.1333		33K	MF, 1%, 0204, E24
0	R 316	57.60.1152		1K5	MF, 1%, 0204, E24
0	R 317	57.60.1103		10K	MF, 1%, 0204, E24
0	R 318	57.60.1332		3K3	MF, 1%, 0204, E24
0	R 319	57.60.1332		3K3	MF, 1%, 0204, E24
0	R 320	57.60.1222		2K2	MF, 1%, 0204, E24
0	R 321	57.60.1392		3K9	MF, 1%, 0204, E24
0	R 322	57.60.1472		4K7	MF, 1%, 0204, E24
0	R 323	57.60.1510		51R	MF, 1%, 0204, E24
0	R 324	57.60.1229		2R2	MF, 1%, 0204, E24
0	R 325	57.60.1103		10K	MF, 1%, 0204, E24
0	R 401	57.60.1152		1K5	MF, 1%, 0204, E24
0	R 402	57.60.1272		2K7	MF, 1%, 0204, E24
0	R 403	57.60.1122		1K2	MF, 1%, 0204, E24
0	R 404	57.60.1272		2K7	MF, 1%, 0204, E24
0	R 405	57.60.1821		820R	MF, 1%, 0204, E24
0	R 406	57.60.1472		4K7	MF, 1%, 0204, E24
0	R 407	57.60.1332		3K3	MF, 1%, 0204, E24
0	R 408	57.60.1222		2K2	MF, 1%, 0204, E24
0	R 409	57.60.1510		51R	MF, 1%, 0204, E24
0	R 410	57.60.1331		330R	MF, 1%, 0204, E24
0	R 411	57.60.1681		680R	MF, 1%, 0204, E24
0	R 412	57.60.1332		3K3	MF, 1%, 0204, E24
0	R 413	57.60.1103		10K	MF, 1%, 0204, E24
0	R 414	57.60.1102		1K	MF, 1%, 0204, E24
0	R 415	57.60.1333		33K	MF, 1%, 0204, E24
0	R 416	57.60.1152		1K5	MF, 1%, 0204, E24
0	R 417	57.60.1103		10K	MF, 1%, 0204, E24
0	R 418	57.60.1332		3K3	MF, 1%, 0204, E24
0	R 419	57.60.1332		3K3	MF, 1%, 0204, E24
0	R 420	57.60.1222		2K2	MF, 1%, 0204, E24
0	R 421	57.60.1392		3K9	MF, 1%, 0204, E24
0	R 422	57.60.1472		4K7	MF, 1%, 0204, E24
0	R 423	57.60.1510		51R	MF, 1%, 0204, E24
0	RA 101	58.05.1201		200R	10%, 0.5W, Cermet
0	RA 102	58.05.1202		2k	10%, 0.5W, Cermet
0	RA 201	58.05.1201		200R	10%, 0.5W, Cermet
0	RA 202	58.05.1202		2k	10%, 0.5W, Cermet
0	RA 301	58.05.1201		200R	10%, 0.5W, Cermet
0	RA 302	58.05.1202		2k	10%, 0.5W, Cermet
0	RA 401	58.05.1201		200R	10%, 0.5W, Cermet
0	RA 402	58.05.1202		2k	10%, 0.5W, Cermet
0	RZ 1	not used		10k	8*R Resistor-Netw 2% SIP9
0	RZ 2	not used		10k	8*R Resistor-Netw 2% SIP9
0	RZ 3	57.88.4103		10k	8*R Resistor-Netw 2% SIP9
0	S 1	not used		SPDT	Toggle on - none - on
0	S 2	55.11.0202		SPDT	Toggle on - none - on
0	T 1	1.022.647.00		1:1.4	OUTPUT TRAFO AES/EBU
0	T 2	1.022.647.00		1:1.4	OUTPUT TRAFO AES/EBU
0	T 3	1.022.647.00		1:1.4	OUTPUT TRAFO AES/EBU
0	T 4	1.022.647.00		1:1.4	OUTPUT TRAFO AES/EBU
0	T 5	1.022.632.00		1:1	DI/DO TRANSFORMER
0	T 101	1.022.454.00		1:0.175	EINGANGSTRAFO 1:0,175
0	T 201	1.022.454.00		1:0.175	EINGANGSTRAFO 1:0,175
0	T 301	1.022.454.00		1:0.175	EINGANGSTRAFO 1:0,175
0	T 401	1.022.454.00		1:0.175	EINGANGSTRAFO 1:0,175
0	TP 1	54.33.6010		2.8*0.8	PCB-Flachstecker, gerade
0	XDL 1	50.20.2501		Spacer	LED-Sockel
0	XDL 3	not used		Spacer	LED-Sockel
0	XDL 5	50.20.2501		Spacer	LED-Sockel
0	XDL 7	not used		Spacer	LED-Sockel
0	XDL 9	50.20.2501		Spacer	LED-Sockel
0	XDL 10	50.20.2501		Spacer	LED-Sockel
0	XIC 4	53.03.0168		16p	DIL 0.3", löt, gerade
0	XIC 5	53.03.0168		16p	DIL 0.3", löt, gerade
0	XIC 13	not used		PLCC32p	PLCC-Socket 32p
0	XIC 14	53.03.2284		PLCC84p	PLCC-Socket 84p
0	XIC 17	53.03.2232		PLCC32p	PLCC-Socket 32p
0	XT 101	1.022.400.03			ISOLATION
0	XT 201	1.022.400.03			ISOLATION
0	XT 301	1.022.400.03			ISOLATION
0	XT 401	1.022.400.03			ISOLATION
0	XY 1	89.01.1499			QUARZ - ISOLIERPLATTE
0	XY 2	89.01.1499			QUARZ - ISOLIERPLATTE
0	Y 1	89.01.0559		11.289MHz	11.289 600 MHz,
0	Y 2	89.01.1015		12.288MHz	12.288 000 MHz, HC 49/U

End of List

Comments

D19M AESI Board 1.940.580.20

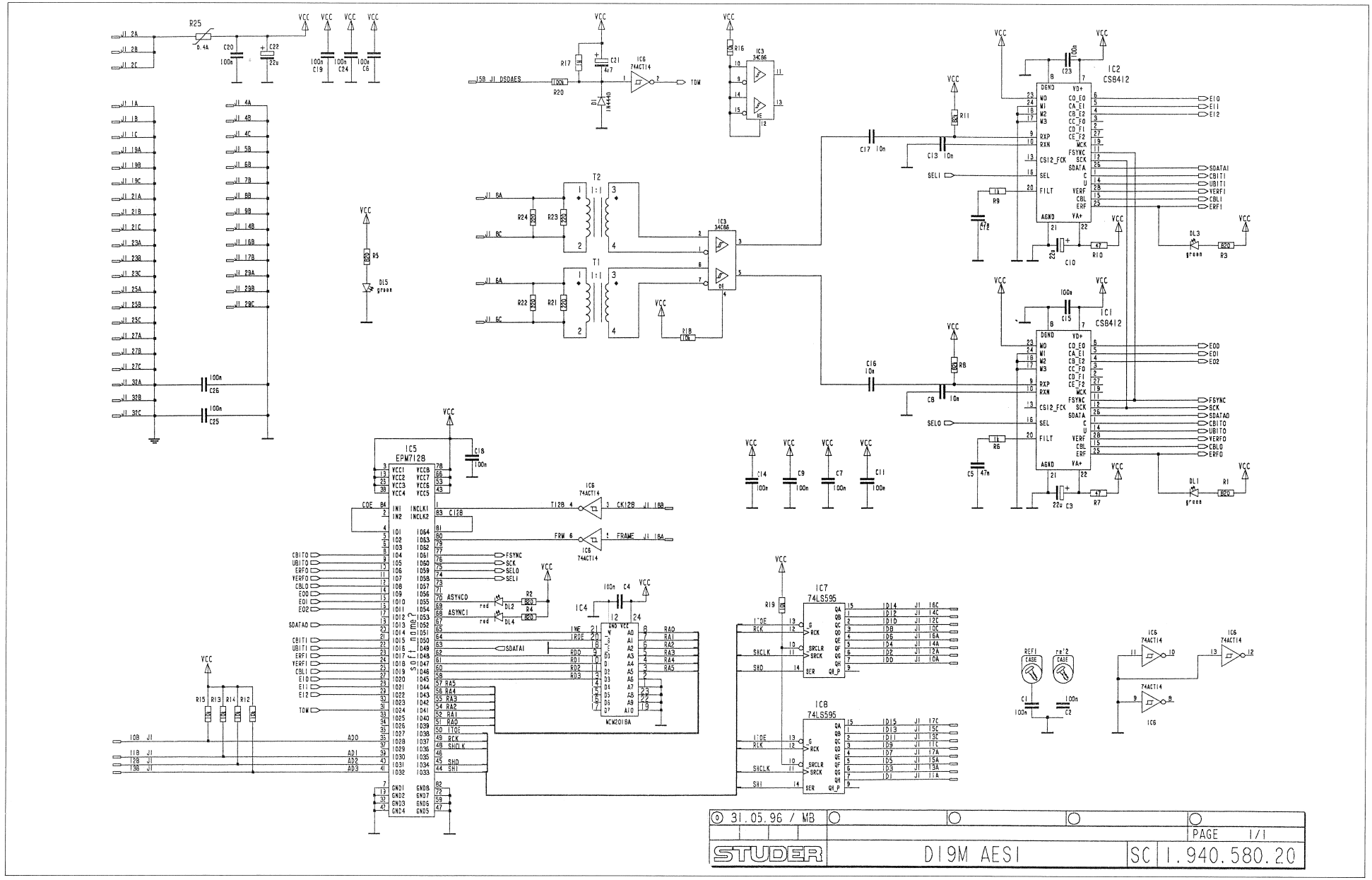

D19M AESI Board 1.940.580.20

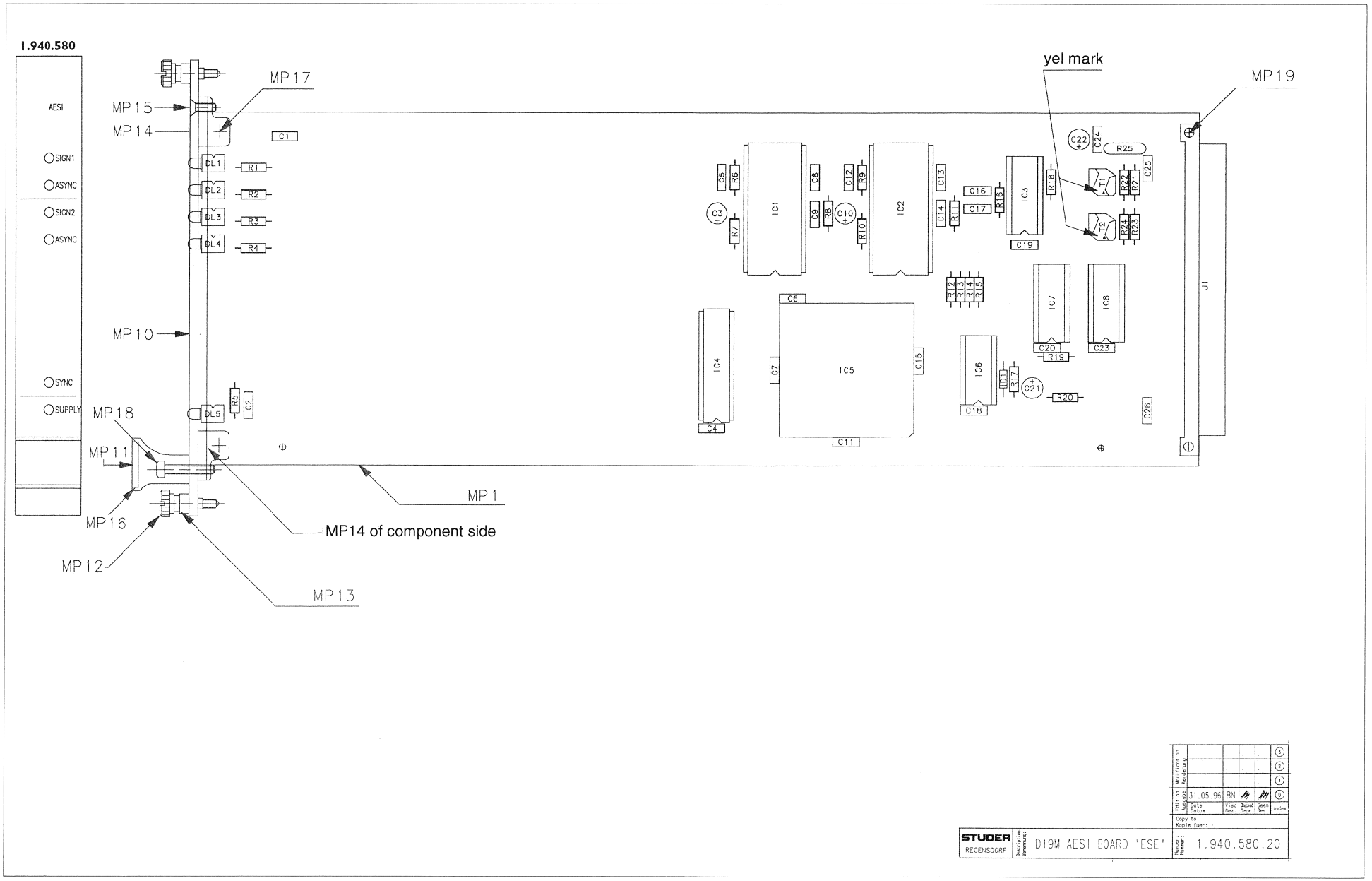

D19M AESI Board 1.940.580.20

Idx.	Pos.	Part No.	Qty.	Type/Val.	Description
0	C 1	59.06.0104		100n	PETP, 10%, 63V
0	C 2	59.06.0104		100n	PETP, 10%, 63V
0	C 3	59.22.5220		22u	EL 25V, 20%, rad RM5
0	C 4	59.06.0104		100n	PETP, 10%, 63V
0	C 5	59.06.0473		47n	PETP, 10%, 63V
0	C 6	59.06.0104		100n	PETP, 10%, 63V
0	C 7	59.06.0104		100n	PETP, 10%, 63V
0	C 8	59.06.0103		10n	PETP, 10%, 63V
0	C 9	59.06.0104		100n	PETP, 10%, 63V
0	C 10	59.22.5220		22u	EL 25V, 20%, rad RM5
0	C 11	59.06.0104		100n	PETP, 10%, 63V
0	C 12	59.06.0473		47n	PETP, 10%, 63V
0	C 13	59.06.0103		10n	PETP, 10%, 63V
0	C 14	59.06.0104		100n	PETP, 10%, 63V
0	C 15	59.06.0104		100n	PETP, 10%, 63V
0	C 16	59.06.0103		10n	PETP, 10%, 63V
0	C 17	59.06.0103		10n	PETP, 10%, 63V
0	C 18	59.06.0104		100n	PETP, 10%, 63V
0	C 19	59.06.0104		100n	PETP, 10%, 63V
0	C 20	59.06.0104		100n	PETP, 10%, 63V
0	C 21	59.22.8479		4u7	EL 50V, 20%, rad RM5
0	C 22	59.22.5220		22u	EL 25V, 20%, rad RM5
0	C 23	59.06.0104		100n	PETP, 10%, 63V
0	C 24	59.06.0104		100n	PETP, 10%, 63V
0	C 25	59.06.0104		100n	PETP, 10%, 63V
0	C 26	59.06.0104		100n	PETP, 10%, 63V
0	D 1	50.04.0125		1N4448	75V, 150mA, 4ns, DO-35
0	DL 1	50.04.2202		HLMP1790	DL HLMP - 1790 GN
					gesockelt mit 50.20.2501
0	DL 2	50.04.2200		HLMP1700	DL HLMP - 1700 RT
					gesockelt mit 50.20.2501
0	DL 3	50.04.2202		HLMP1790	DL HLMP - 1790 GN
					gesockelt mit 50.20.2501
0	DL 4	50.04.2200		HLMP1700	DL HLMP - 1700 RT
					gesockelt mit 50.20.2501
0	DL 5	50.04.2202		HLMP1790	DL HLMP - 1790 GN
					gesockelt mit 50.20.2501
0	IC 1	50.13.0202		CS8412	IC CS 8412-CP ,A
0	IC 2	50.13.0202		CS8412	IC CS 8412-CP ,A
0	IC 3	50.15.0128		34C86	IC DS 34 C 86 TN, MC34C86P ,A
0	IC 4	50.14.1009		CY7C128-35	IC MCM 2018 A - 35 ,A
0	IC 5	1.940.960.20			SW 580 DSDAI (50.63.4205)
					gesockelt mit 53.03.2284
0	IC 6	50.17.7014		ACT14	.. 74 ACT 14 .
0	IC 7	50.06.0595		74LS595	IC SN 74 LS 595 N
0	IC 8	50.06.0595		74LS595	IC SN 74 LS 595 N
0	J 1	54.11.2009			J EU-R 3 * 32
0	MP 1	1.940.580.11			D19M AESI BOARD PCB
0	MP 2	1.940.580.04			TYPENSCHILD
0	MP 3	43.01.0108		Label	ESE-WARNSCHILD
0	MP 4	not used		Label	TEXT-ETIK. 5*20 HARDWARE -20
0	MP 10	1.940.580.01	1 pce		FRONTPLATTE
0	MP 11	1.940.600.04	1 pce		GRIFFEINLAGE 4TE
0	MP 12	49.02.0520	2 pcs	M2.5*12	Rändelschraube (Rack)
0	MP 13	49.02.0521	2 pcs		Metall-Buchse (Rack)
0	MP 14	49.02.0522	2 pcs		Kartenhalter (Rack)
0	MP 15	49.02.0523	1 pce	M2.5*7	Senk-Schr, KS, Senkripp
0	MP 16	49.02.0504	1 pce	4TE	Frontplatten-Griff
0	MP 17	21.53.0279	2 pcs		Z - SCHR. IS , ZN , M2.5 * 6
0	MP 18	21.53.0284	1 pce		Z - SCHR. IS , ZN , M2.5 * 16
0	MP 19	28.99.0119	2 pcs		ROHRNIETE D 2.5*0.15* 9
0	R 1	57.11.3821		820R	MF, 1%, 0207
0	R 2	57.11.3821		820R	MF, 1%, 0207
0	R 3	57.11.3821		820R	MF, 1%, 0207
0	R 4	57.11.3821		820R	MF, 1%, 0207
0	R 5	57.11.3821		820R	MF, 1%, 0207
0	R 6	57.11.3102		1k0	MF, 1%, 0207
0	R 7	57.11.3470		47R	MF, 1%, 0207
0	R 8	57.11.3823		82k	MF, 1%, 0207
0	R 9	57.11.3102		1k0	MF, 1%, 0207
0	R 10	57.11.3470		47R	MF, 1%, 0207
0	R 11	57.11.3823		82k	MF, 1%, 0207
0	R 12	57.11.3103		10k	MF, 1%, 0207
0	R 13	57.11.3103		10k	MF, 1%, 0207
0	R 14	57.11.3103		10k	MF, 1%, 0207
0	R 15	57.11.3103		10k	MF, 1%, 0207
0	R 16	57.11.3103		10k	MF, 1%, 0207
0	R 17	57.11.3105		1M0	MF, 1%, 0207
0	R 18	57.11.3103		10k	MF, 1%, 0207
0	R 19	57.11.3103		10k	MF, 1%, 0207
0	R 20	57.11.3104		100k	MF, 1%, 0207
0	R 21	57.11.3221		220R	MF, 1%, 0207
0	R 22	57.11.3221		220R	MF, 1%, 0207
0	R 23	57.11.3221		220R	MF, 1%, 0207
0	R 24	57.11.3221		220R	MF, 1%, 0207
0	R 25	57.92.7053		1.6A	POLY- PTC, 30V
0	T 1	1.022.632.00		1.022.632.00	DI/DO TRANSFORMER
0	T 2	1.022.632.00		1.022.632.00	DI/DO TRANSFORMER
0	XDL 1	50.20.2501		Spacer	LED-Sockel
0	XDL 2	50.20.2501		Spacer	LED-Sockel
0	XDL 3	50.20.2501		Spacer	LED-Sockel
0	XDL 4	50.20.2501		Spacer	LED-Sockel
0	XDL 5	50.20.2501		Spacer	LED-Sockel
0	XIC 5	53.03.2284		XIC PLCC84	XIC PLCC 84 PIN

End of List

Comments

SCHEMATA / CIRCUIT DIAGRAMS

Block Diagram D19 M Madi Coaxial 1.940.500.21
Block Diagram Madi Optical 1.940.510.21

D19 M Madi Coaxial 1.940.500.21

Madi Optical 1.940.510.21

D19 M C4 DA Board 1.940.570.21

D19 M AESO Board 1.940.585.21

Block Diagram
D19M Madi Coaxial 1.940.500.21
Madi Optical 1.940.510.21

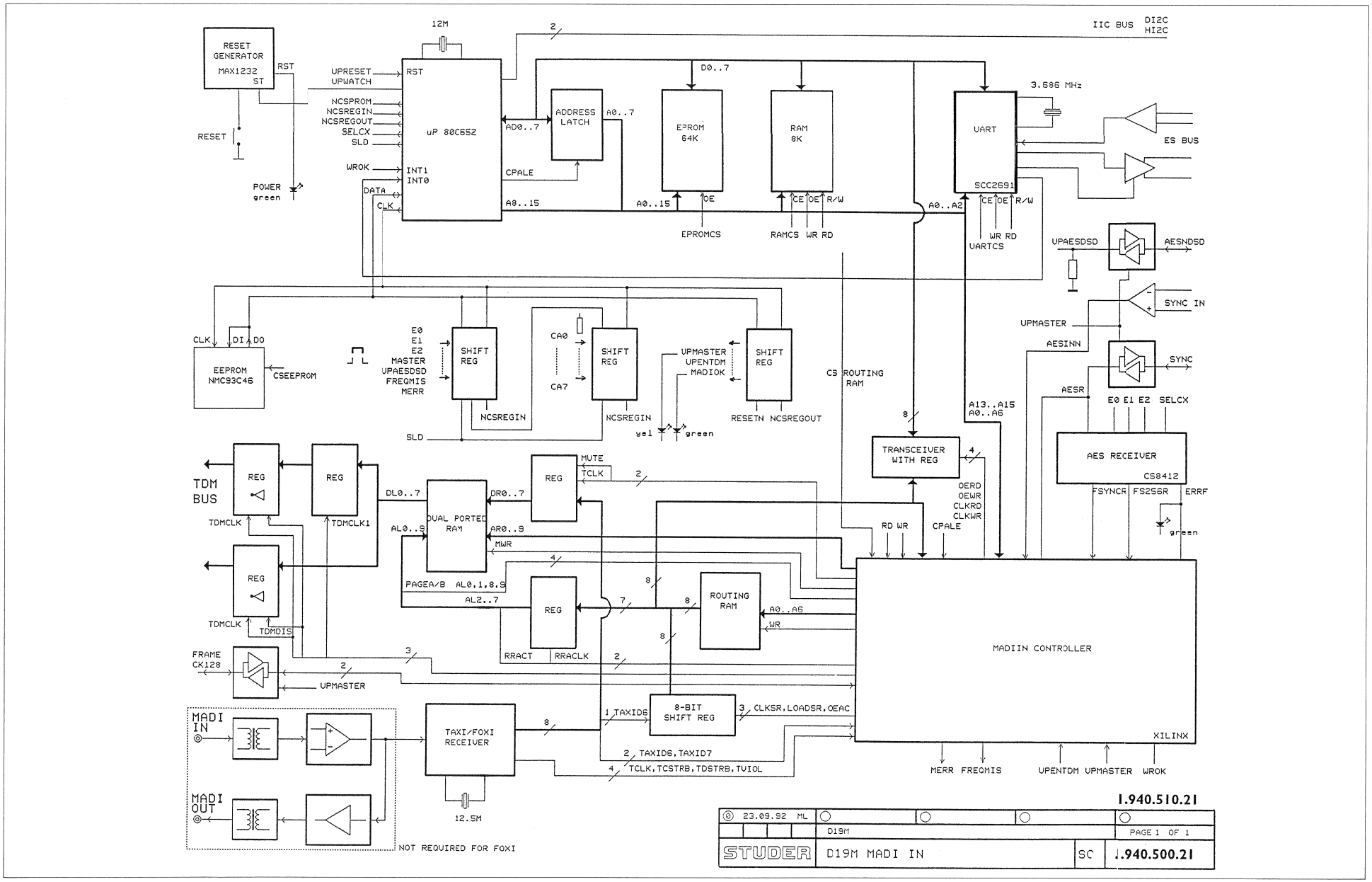

D19M Madi Coaxial 1.940.500.21
Madi Optical 1.940.510.21

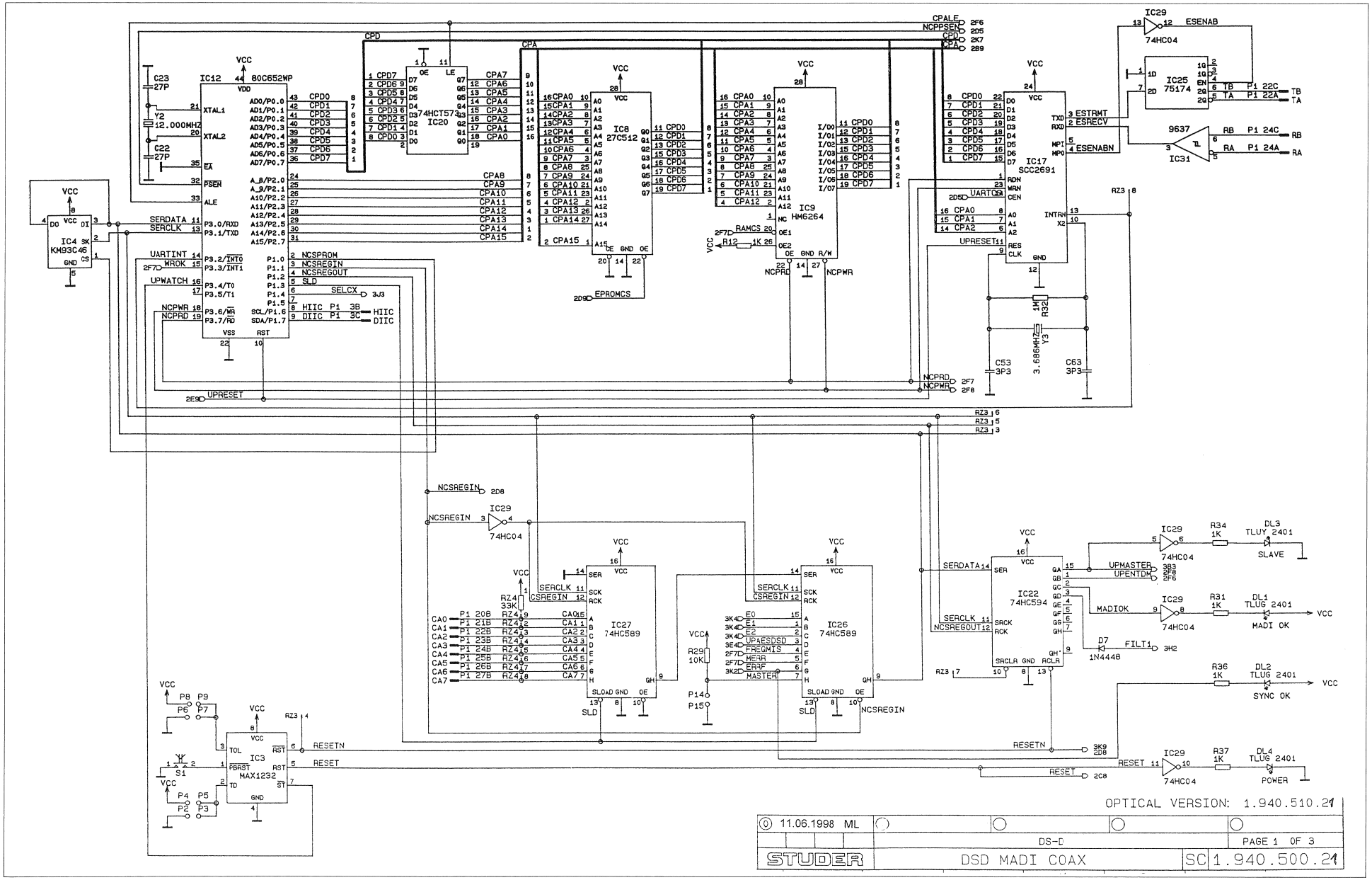

D19M Madi Coaxial 1.940.500.21
Madi Optical 1.940.510.21

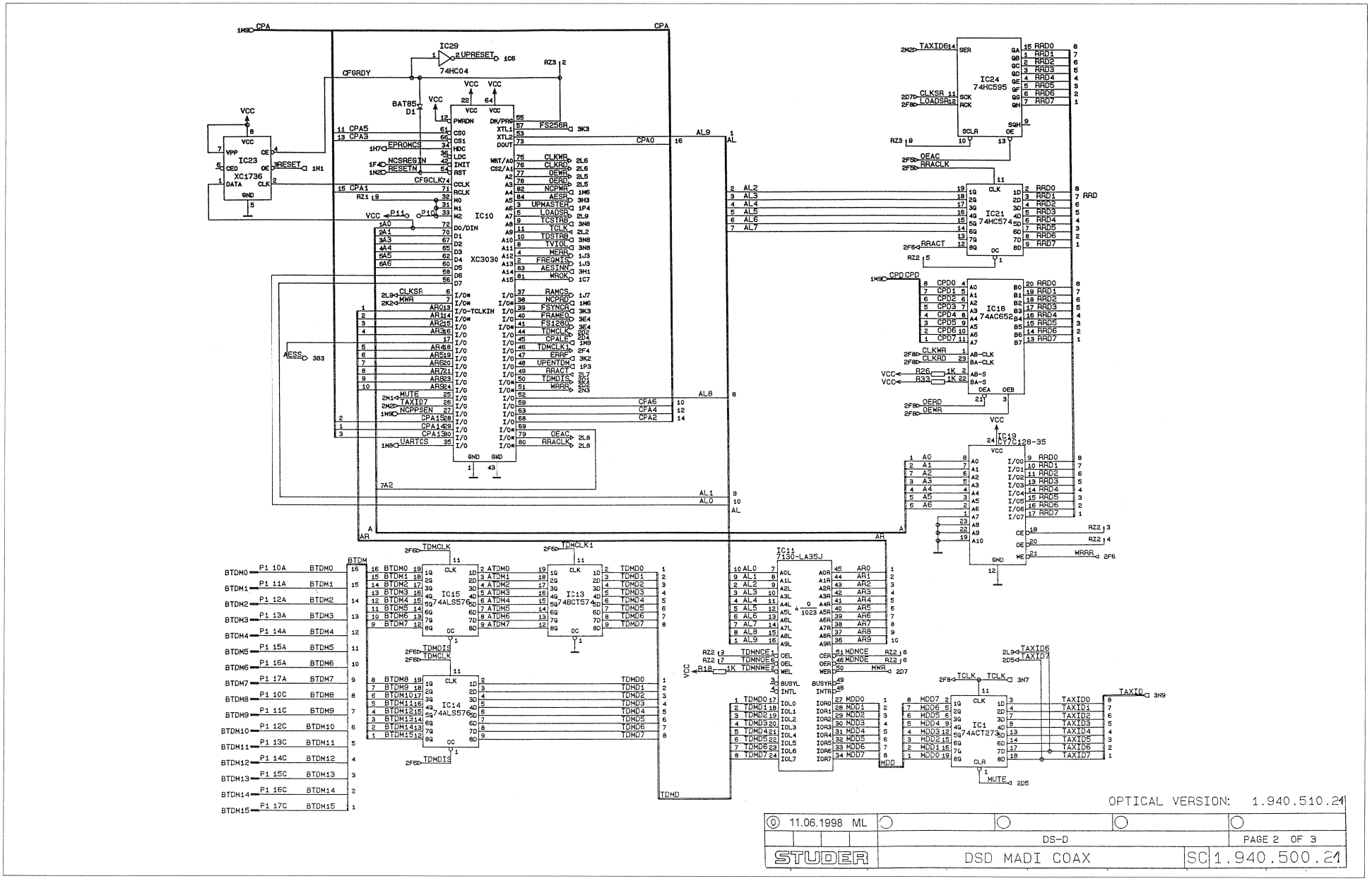

D19M Madi Coaxial 1.940.500.21
Madi Optical 1.940.510.21

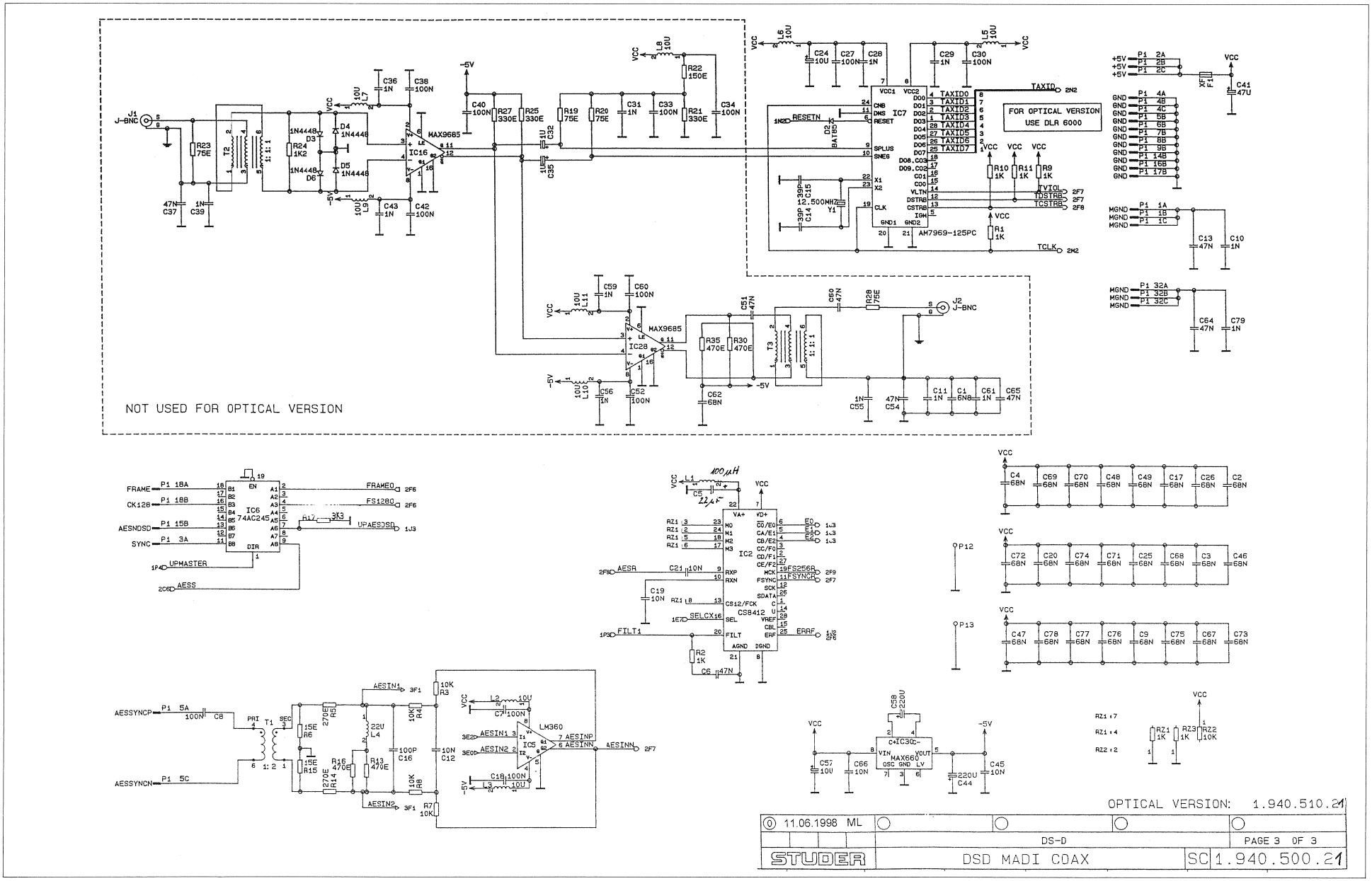

D19M Madi Coaxial 1.940.500.21

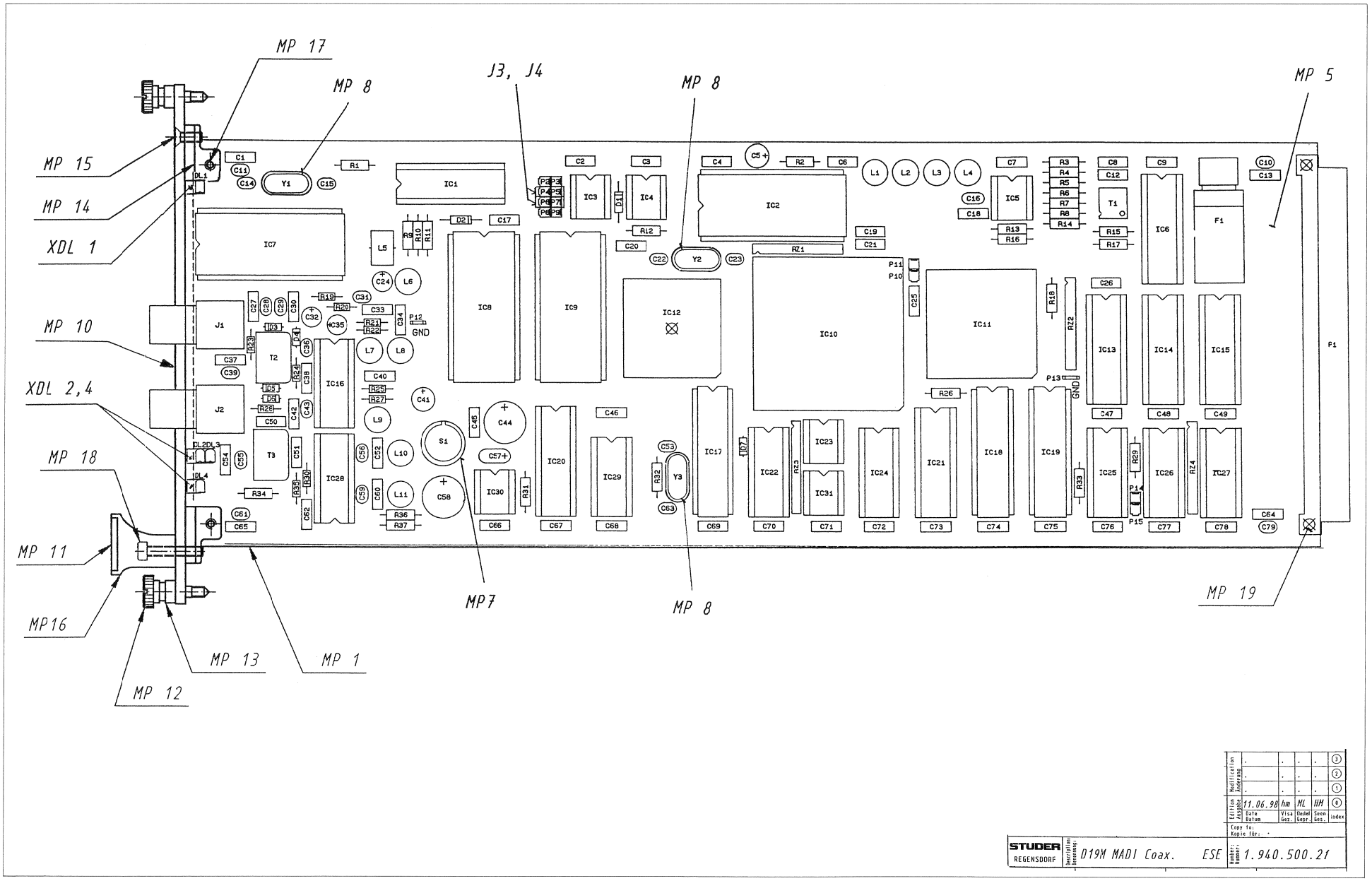

D19M Madi Coaxial 1.940.500.21

Idx.	Pos.	Part No.	Qty.	Type/Val.	Description
0	C 1	59.06.0682		6n8	PETP, 63V, 10%, RM5
0	C 2	59.06.0683		68n	PETP, 63V, 10%, RM5
0	C 3	59.06.0683		68n	PETP, 63V, 10%, RM5
0	C 4	59.06.0683		68n	PETP, 63V, 10%, RM5
0	C 5	59.22.5220		22u	EL 25V, 20%, RM5
0	C 6	59.06.0473		47n	PETP, 63V, 10%, RM5
0	C 7	59.06.0104		100n	PETP, 63V, 10%, RM5
0	C 8	59.06.0104		100n	PETP, 63V, 10%, RM5
0	C 9	59.06.0683		68n	PETP, 63V, 10%, RM5
0	C 10	59.32.4102		1n	C 1000 P , 20%, 50V , CER
0	C 11	59.32.4102		1n	C 1000 P , 20%, 50V , CER
0	C 12	59.06.0103		10n	PETP, 63V, 10%, RM5
0	C 13	59.06.0473		47n	PETP, 63V, 10%, RM5
0	C 14	59.34.2390		39p	CER 63V, 5%, N150
0	C 15	59.34.2390		39p	CER 63V, 5%, N150
0	C 16	59.34.4101		100p	CER 63V, 5%, N750
0	C 17	59.06.0683		68n	PETP, 63V, 10%, RM5
0	C 18	59.06.0104		100n	PETP, 63V, 10%, RM5
0	C 19	59.06.0103		10n	PETP, 63V, 10%, RM5
0	C 20	59.06.0683		68n	PETP, 63V, 10%, RM5
0	C 21	59.06.0103		10n	PETP, 63V, 10%, RM5
0	C 22	59.34.2270		27p	CER 63V, 5%, N150
0	C 23	59.34.2270		27p	CER 63V, 5%, N150
0	C 24	59.22.6100		10u	EL 35V, 20%, RM5
0	C 25	59.06.0683		68n	PETP, 63V, 10%, RM5
0	C 26	59.06.0683		68n	PETP, 63V, 10%, RM5
0	C 27	59.06.0104		100n	PETP, 63V, 10%, RM5
0	C 28	59.32.4102		1n	C 1000 P , 20%, 50V , CER
0	C 29	59.32.4102		1n	C 1000 P , 20%, 50V , CER
0	C 30	59.06.0104		100n	PETP, 63V, 10%, RM5
0	C 31	59.32.4102		1n	C 1000 P , 20%, 50V , CER
0	C 32	59.30.6109		1u	TA, 20%, 35V
0	C 33	59.06.0104		100n	PETP, 63V, 10%, RM5
0	C 34	59.06.0104		100n	PETP, 63V, 10%, RM5
0	C 35	59.30.6109		1u	TA, 20%, 35V
0	C 36	59.32.4102		1n	C 1000 P , 20%, 50V , CER
0	C 37	59.06.0473		47n	PETP, 63V, 10%, RM5
0	C 38	59.06.0104		100n	PETP, 63V, 10%, RM5
0	C 39	59.32.4102		1n	C 1000 P , 20%, 50V , CER
0	C 40	59.06.0104		100n	PETP, 63V, 10%, RM5
0	C 41	59.22.3470		47u	EL 10V, 20%, RM5
0	C 42	59.06.0104		100n	PETP, 63V, 10%, RM5
0	C 43	59.32.4102		1n	C 1000 P , 20%, 50V , CER
0	C 44	59.22.4221		220u	EL 16V, 20%, RM5
0	C 45	59.06.0103		10n	PETP, 63V, 10%, RM5
0	C 46	59.06.0683		68n	PETP, 63V, 10%, RM5
0	C 47	59.06.0683		68n	PETP, 63V, 10%, RM5
0	C 48	59.06.0683		68n	PETP, 63V, 10%, RM5
0	C 49	59.06.0683		68n	PETP, 63V, 10%, RM5
0	C 50	59.06.0473		47n	PETP, 63V, 10%, RM5
0	C 51	59.06.0473		47n	PETP, 63V, 10%, RM5
0	C 52	59.06.0104		100n	PETP, 63V, 10%, RM5
0	C 53	59.34.0339		3p3	CER 63V, 5%, P100
0	C 54	59.06.0473		47n	PETP, 63V, 10%, RM5
0	C 55	59.32.4102		1n	C 1000 P , 20%, 50V , CER
0	C 56	59.32.4102		1n	C 1000 P , 20%, 50V , CER
0	C 57	59.22.6100		10u	EL 35V, 20%, RM5
0	C 58	59.22.4221		220u	EL 16V, 20%, RM5
0	C 59	59.32.4102		1n	C 1000 P , 20%, 50V , CER
0	C 60	59.06.0104		100n	PETP, 63V, 10%, RM5
0	C 61	59.32.4102		1n	C 1000 P , 20%, 50V , CER
0	C 62	59.06.0683		68n	PETP, 63V, 10%, RM5
0	C 63	59.34.0339		3p3	CER 63V, 5%, P100
0	C 64	59.06.0473		47n	PETP, 63V, 10%, RM5
0	C 65	59.06.0473		47n	PETP, 63V, 10%, RM5
0	C 66	59.06.0103		10n	PETP, 63V, 10%, RM5
0	C 67	59.06.0683		68n	PETP, 63V, 10%, RM5
0	C 68	59.06.0683		68n	PETP, 63V, 10%, RM5
0	C 69	59.06.0683		68n	PETP, 63V, 10%, RM5
0	C 70	59.06.0683		68n	PETP, 63V, 10%, RM5
0	C 71	59.06.0683		68n	PETP, 63V, 10%, RM5
0	C 72	59.06.0683		68n	PETP, 63V, 10%, RM5
0	C 73	59.06.0683		68n	PETP, 63V, 10%, RM5
0	C 74	59.06.0683		68n	PETP, 63V, 10%, RM5
0	C 75	59.06.0683		68n	PETP, 63V, 10%, RM5
0	C 76	59.06.0683		68n	PETP, 63V, 10%, RM5
0	C 77	59.06.0683		68n	PETP, 63V, 10%, RM5
0	C 78	59.06.0683		68n	PETP, 63V, 10%, RM5
0	C 79	59.32.4102		1n	C 1000 P , 20%, 50V , CER
0	D 1	50.04.0127		BAT85	200mA, Schottky
0	D 2	50.04.0127		BAT85	200mA, Schottky
0	D 3	50.04.0125		1N4448	75V, 150mA, 4ns, DO-35
0	D 4	50.04.0125		1N4448	75V, 150mA, 4ns, DO-35
0	D 5	50.04.0125		1N4448	75V, 150mA, 4ns, DO-35
0	D 6	50.04.0125		1N4448	75V, 150mA, 4ns, DO-35

Idx.	Pos.	Part No.	Qty.	Type/Val.	Description
0	D 7	50.04.0125		1N4448	75V, 150mA, 4ns, DO-35
0	DL 1	50.04.2202		HLMP1790	DL HLMP - 1790 GN
0	DL 2	50.04.2202		HLMP1790	DL HLMP - 1790 GN
0	DL 3	50.04.2201		HLMP1719	DL HLMP - 1719 GB
0	DL 4	50.04.2202		HLMP1790	DL HLMP - 1790 GN
0	F 1	51.01.0119		1.6A	T 5*20 L 250V
0	IC 1	50.17.7273		ACT273	.. 74 ACT 273 .
0	IC 2	50.13.0202		CS8412	IC CS 8412-CP ,A
0	IC 3	50.11.0159		MAX1232	IC MAX 1232 CPA, DS 1232
0	IC 4	50.14.2103		HY93C46S	EEPROM 64 * 16, serial
0	IC 5	50.11.1002		LM360	High speed Comparator
0	IC 6	50.06.0245		74LS245	IC SN 74 LS 245 N TTL-3
0	IC 7	50.16.0702		AM7969-125P	IC AM 7969-125 PC ,A
0	IC 8	1.940.940.20			SW 500 MADI (50.14.2002)
0	IC 9	50.14.0133		5565	IC HM 6264LP-15 ,A
0	IC 10	50.63.4002		XC3030A-7	LCA 3000 / 3000 PLCC84
0	IC 11	50.63.1702		CY7C130	Dualport SRAM, 1K*8
0	IC 12	50.63.0009		80C652	MPU 8bit
0	IC 13	50.17.0574		74HCT574	IC .. 74 HCT574 ., ,A
0	IC 14	50.06.1576		74ALS576	Octal D-Type FF, tri
0	IC 15	50.06.1576		74ALS576	Octal D-Type FF, tri
0	IC 16	50.11.0156		MAX9685	ECL Comparator, latching
0	IC 17	50.16.0201		SCC2691	IC SCC 2691 AE 1 N 24 ,A
0	IC 18	50.17.5652		74AC652	Octal Bus Reg/Transceiver
0	IC 19	50.14.1009		7C128A	SRAM 2K*8 35ns
0	IC 20	50.17.0573		74HCT573	IC .. 74 HCT573 ., ,A
0	IC 21	50.17.1574		74HC574	IC ... 74 HC 574 ., ,A
0	IC 22	50.17.1594		74HC594	IC ... 74 HC 594 ., ,A
0	IC 23	1.940.941.21			SW 500 MADIIN (50.14.1501)
0	IC 24	50.17.1595		74HC595	IC ... 74 HC 595 ., ,A
0	IC 25	50.15.0121		75174	IC SN 75174 N
0	IC 26	50.17.1589		74HC589	MC 74 HC 589 N
0	IC 27	50.17.1589		74HC589	MC 74 HC 589 N
0	IC 28	50.11.0156		MAX9685	ECL Comparator, latching
0	IC 29	50.17.1004		74HC04	IC ... 74 HC 04 ., ,A
0	IC 30	50.10.0124		MAX660	V-Converter ... +5.5V to -5.5V
0	IC 31	50.15.0114		9637	Dual diff Line Receiver
0	J 1	54.21.2031		BNC	J 1 POL PRINT/WINKEL BNC
0	J 2	54.21.2031		BNC	J 1 POL PRINT/WINKEL BNC
0	J 3	54.01.0021		Jumper	0.63 * 0.63mm
0	J 4	54.01.0021		Jumper	0.63 * 0.63mm
0	L 1	62.02.3101		100uH	10%, radial RM 5
0	L 2	62.02.3100		10uH	10%, radial RM 5
0	L 3	62.02.3100		10uH	10%, radial RM 5
0	L 4	62.02.3220		22uH	10%, radial RM 5
0	L 5	62.03.0001		10uH	1A Toroid Chocke
0	L 6	62.02.3100		10uH	10%, radial RM 5
0	L 7	62.02.3100		10uH	10%, radial RM 5
0	L 8	62.02.3100		10uH	10%, radial RM 5
0	L 9	62.02.3100		10uH	10%, radial RM 5
0	L 10	62.02.3100		10uH	10%, radial RM 5
0	L 11	62.02.3100		10uH	10%, radial RM 5
0	MP 1	1.940.500.11			D19M MADI PCB
0	MP 2	1.010.057.43			Baugruppenschild
0	MP 3	43.01.0108		Label	ESE-WARNSCHILD
0	MP 5	1.010.117.51			TEXT-ETIK. 5*20 (T1.60A)
0	MP 7	1.010.015.50		Spacer	ISOLIER-SCHEIBE ZU T0 5
0	MP 8	89.01.1499	3 pcs		QUARZ - ISOLIERPLATTE
0	MP 10	1.940.500.01	1 pce		FRONTPLATTE
0	MP 11	1.940.600.04	1 pce		GRIFFEINLAGE 4TE
0	MP 12	49.02.0520	2 pcs	M2.5*12	Rändelschraube (Rack)
0	MP 13	49.02.0521	2 pcs		Metall-Buchse (Rack)
0	MP 14	49.02.0522	2 pcs		Kartenhalter (Rack)
0	MP 15	49.02.0523	1 pce	M2.5*7	Senk-Schr, KS, Senkripp
0	MP 16	49.02.0504	1 pce	4TE	Frontplatten-Griff
0	MP 17	21.53.0279	2 pcs	M2.5*6	Z-Schraube Inbus Zn gb chr
0	MP 18	21.53.0284	1 pce	M2.5*16	Z-Schraube Inbus Zn gb chr
0	MP 19	28.99.0119	2 pcs		ROHRNIETE D 2.5*0.15* 9
0	MP 20	1.101.001.21	1 pce		TEXT-ETIK. 5*20 HARDWARE -21
0	P 1	54.11.2009		96p	EU-R 3*32p
0	P 2	54.01.0020		1p	Pin 0.63*0.63
0	P 3	54.01.0020		1p	Pin 0.63*0.63
0	P 4	54.01.0020		1p	Pin 0.63*0.63
0	P 5	54.01.0020		1p	Pin 0.63*0.63
0	P 6	54.01.0020		1p	Pin 0.63*0.63
0	P 7	54.01.0020		1p	Pin 0.63*0.63
0	P 8	54.01.0020		1p	Pin 0.63*0.63
0	P 9	54.01.0020		1p	Pin 0.63*0.63
0	P 10	54.01.0020		1p	Pin 0.63*0.63
0	P 11	54.01.0020		1p	Pin 0.63*0.63

D19M Madi Coaxial 1.940.500.21

Idx.	Pos.	Part No.	Qty.	Type/Val.	Description
0	P 12	54.02.0320		1p	Flatpin, 2.8*0.8mm
0	P 13	54.02.0320		1p	Flatpin, 2.8*0.8mm
0	P 14	54.01.0020		1p	Pin 0.63*0.63
0	P 15	54.01.0020		1p	Pin 0.63*0.63
0	R 1	57.11.3102		1k0	MF, 1%, 0207
0	R 2	57.11.3102		1k0	MF, 1%, 0207
0	R 3	57.11.3103		10k	MF, 1%, 0207
0	R 4	57.11.3103		10k	MF, 1%, 0207
0	R 5	57.11.3271		270R	MF, 1%, 0207
0	R 6	57.11.3150		15R	MF, 1%, 0207
0	R 7	57.11.3103		10k	MF, 1%, 0207
0	R 8	57.11.3103		10k	MF, 1%, 0207
0	R 9	57.11.3102		1k0	MF, 1%, 0207
0	R 10	57.11.3102		1k0	MF, 1%, 0207
0	R 11	57.11.3102		1k0	MF, 1%, 0207
0	R 12	57.11.3102		1k0	MF, 1%, 0207
0	R 13	57.11.3471		470R	MF, 1%, 0207
0	R 14	57.11.3271		270R	MF, 1%, 0207
0	R 15	57.11.3150		15R	MF, 1%, 0207
0	R 16	not used		470R	MF, 1%, 0207
0	R 17	57.11.3103		10k	MF, 1%, 0207
0	R 18	57.11.3102		1k0	MF, 1%, 0207
0	R 19	57.10.1750		75R	MF, 1%, 0204
0	R 20	57.10.1750		75R	MF, 1%, 0204
0	R 21	57.10.1331		330R	MF, 1%, 0204
0	R 22	57.11.3151		150R	MF, 1%, 0207
0	R 23	57.10.1750		75R	MF, 1%, 0204
0	R 24	57.10.1122		1k2	MF, 1%, 0204
0	R 25	57.10.1331		330R	MF, 1%, 0204
0	R 26	57.11.3102		1k0	MF, 1%, 0207
0	R 27	57.10.1331		330R	MF, 1%, 0204
0	R 28	57.10.1750		75R	MF, 1%, 0204
0	R 29	57.11.3103		10k	MF, 1%, 0207
0	R 30	57.10.1471		470R	MF, 1%, 0204
0	R 31	57.11.3102		1k0	MF, 1%, 0207
0	R 32	57.11.3105		1M0	MF, 1%, 0207
0	R 33	57.11.3102		1k0	MF, 1%, 0207
0	R 34	57.11.3102		1k0	MF, 1%, 0207
0	R 35	57.10.1471		470R	MF, 1%, 0204
0	R 36	57.11.3102		1k0	MF, 1%, 0207
0	R 37	57.11.3102		1k0	MF, 1%, 0207
0	RZ 1	57.88.4102		1k0	8*R Resistor-Netw 2% SIP9
0	RZ 2	57.88.4102		1k0	8*R Resistor-Netw 2% SIP9
0	RZ 3	57.88.4103		10k	8*R Resistor-Netw 2% SIP9
0	RZ 4	57.88.4333		33k	8*R Resistor-Netw 2% SIP9
0	S 1	55.03.0122		1*a	S 1 TASTE, 1*A, PRINT,IMPULS
0	T 1	63.15.0021			RF - Trafo
0	T 2	63.15.0001			IMPULSTRANSFORMATOR
0	T 3	63.15.0001			IMPULSTRANSFORMATOR
0	XDL 1	50.20.2501		Spacer	LED-Sockel
0	XDL 2	50.20.2501		Spacer	LED-Sockel
0	XDL 3	50.20.2501		Spacer	LED-Sockel
0	XF 1	53.03.0118			XF 5 * 20, PRINT-LIEGEND
0	XIC 8	53.03.0173		28p	DIL 0.6", löt, gerade
0	XIC 10	53.03.2284		PLCC84p	PLCC-Socket 84p
0	XIC 11	53.03.2252		PLCC52p	PLCC-Socket 52p
0	XIC 12	53.03.2244		PLCC44p	PLCC-Socket 44p
0	XIC 14	53.03.0165		20p	DIL 0.3", löt, gerade
0	XIC 15	53.03.0165		20p	DIL 0.3", löt, gerade
0	XIC 23	53.03.0166		8p	DIL 0.3", löt, gerade
0	XIC 25	53.03.0168		16p	DIL 0.3", löt, gerade
0	XIC 31	53.03.0166		8p	DIL 0.3", löt, gerade
0	Y 1	89.01.1013		12.500MHz	12.500 000 MHz, HC 49/U
0	Y 2	89.01.1014		12.000MHz	12.000 000 MHz, HC 49/U
0	Y 3	89.01.1002		3.686MHz	3.686 400 MHz, HC 18/U

End of List

Comments

Madi Optical 1.940.510.21

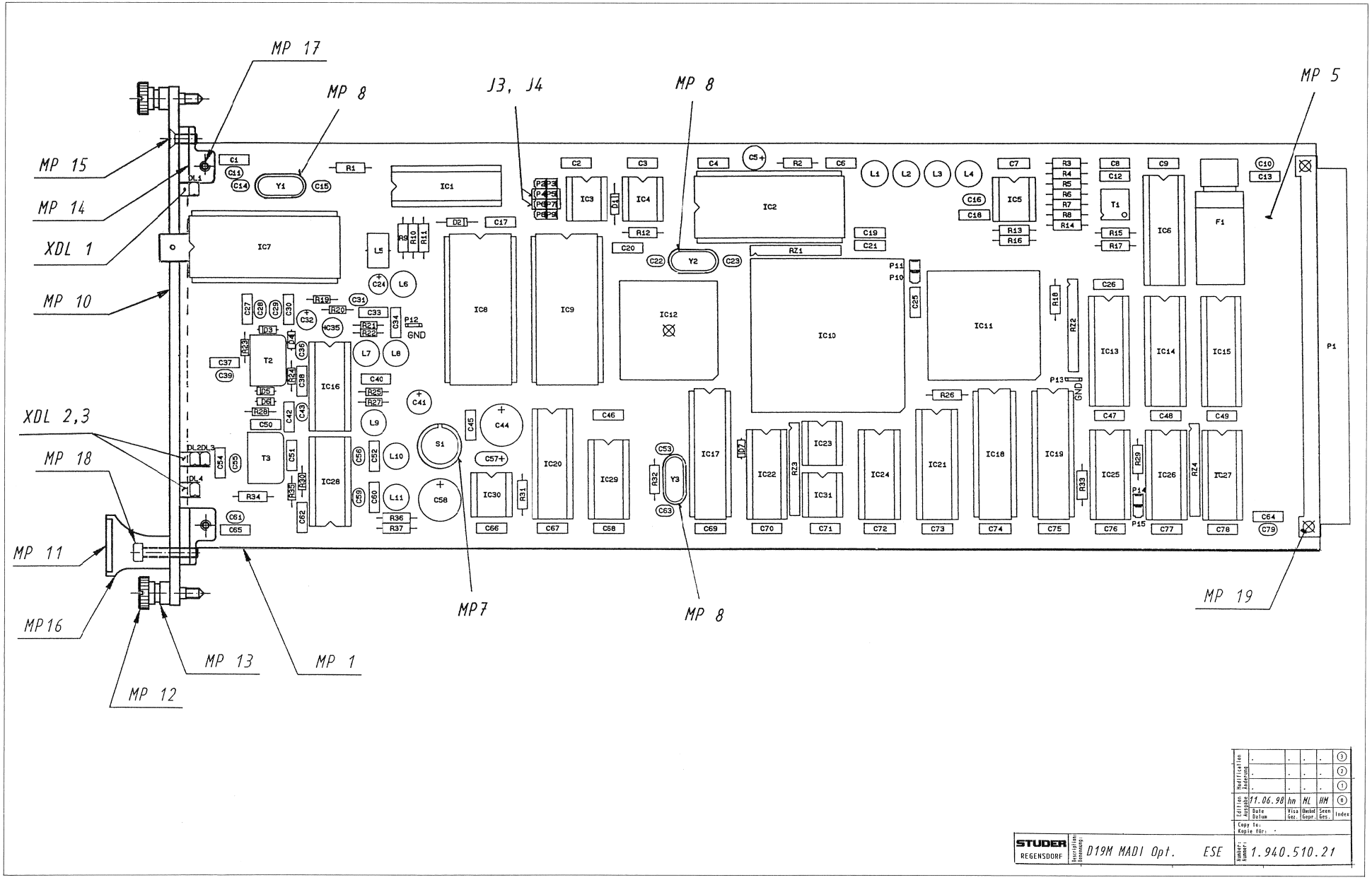

Madi Optical 1.940.510.21

Idx.	Pos.	Part No.	Qty.	Type/Val.	Description
0	C 1	not used		6n8	PETP, 63V, 10%, RM5
0	C 2	59.06.0683		68n	PETP, 63V, 10%, RM5
0	C 3	59.06.0683		68n	PETP, 63V, 10%, RM5
0	C 4	59.06.0683		68n	PETP, 63V, 10%, RM5
0	C 5	59.22.5220		22u	EL 25V, 20%, RM5
0	C 6	59.06.0473		47n	PETP, 63V, 10%, RM5
0	C 7	59.06.0104		100n	PETP, 63V, 10%, RM5
0	C 8	59.06.0104		100n	PETP, 63V, 10%, RM5
0	C 9	59.06.0683		68n	PETP, 63V, 10%, RM5
0	C 10	59.32.4102		1n	C 1000 P , 20%, 50V , CER
0	C 11	not used		1n	C 1000 P , 20%, 50V , CER
0	C 12	59.06.0103		10n	PETP, 63V, 10%, RM5
0	C 13	59.06.0473		47n	PETP, 63V, 10%, RM5
0	C 14	59.34.2390		39p	CER 63V, 5%, N150
0	C 15	59.34.2390		39p	CER 63V, 5%, N150
0	C 16	59.34.4131		100p	CER 63V, 5%, N750
0	C 17	59.06.0683		68n	PETP, 63V, 10%, RM5
0	C 18	59.06.0104		100n	PETP, 63V, 10%, RM5
0	C 19	59.06.0103		10n	PETP, 63V, 10%, RM5
0	C 20	59.06.0683		68n	PETP, 63V, 10%, RM5
0	C 21	59.06.0103		10n	PETP, 63V, 10%, RM5
0	C 22	59.34.2270		27p	CER 63V, 5%, N150
0	C 23	59.34.2270		27p	CER 63V, 5%, N150
0	C 24	59.22.6100		10u	EL 35V, 20%, RM5
0	C 25	59.06.0683		68n	PETP, 63V, 10%, RM5
0	C 26	59.06.0683		68n	PETP, 63V, 10%, RM5
0	C 27	59.06.0104		100n	PETP, 63V, 10%, RM5
0	C 28	59.32.4102		1n	C 1000 P , 20%, 50V , CER
0	C 29	59.32.4102		1n	C 1000 P , 20%, 50V , CER
0	C 30	59.06.0104		100n	PETP, 63V, 10%, RM5
0	C 31	not used		1n	C 1000 P , 20%, 50V , CER
0	C 32	not used		1u	TA, 20%, 35V
0	C 33	not used		100n	PETP, 63V, 10%, RM5
0	C 34	not used		100n	PETP, 63V, 10%, RM5
0	C 35	not used		1u	TA, 20%, 35V
0	C 36	not used		1n	C 1000 P , 20%, 50V , CER
0	C 37	not used		47n	PETP, 63V, 10%, RM5
0	C 38	not used		100n	PETP, 63V, 10%, RM5
0	C 39	not used		1n	C 1000 P , 20%, 50V , CER
0	C 40	not used		100n	PETP, 63V, 10%, RM5
0	C 41	59.22.3470		47u	EL 10V, 20%, RM5
0	C 42	not used		100n	PETP, 63V, 10%, RM5
0	C 43	not used		1n	C 1000 P , 20%, 50V , CER
0	C 44	59.22.4221		220u	EL 16V, 20%, RM5
0	C 45	59.06.0103		10n	PETP, 63V, 10%, RM5
0	C 46	59.06.0683		68n	PETP, 63V, 10%, RM5
0	C 47	59.06.0683		68n	PETP, 63V, 10%, RM5
0	C 48	59.06.0683		68n	PETP, 63V, 10%, RM5
0	C 49	59.06.0683		68n	PETP, 63V, 10%, RM5
0	C 50	not used		47n	PETP, 63V, 10%, RM5
0	C 51	not used		47n	PETP, 63V, 10%, RM5
0	C 52	not used		100n	PETP, 63V, 10%, RM5
0	C 53	59.34.0339		3p3	CER 63V, 5%, P100
0	C 54	not used		47n	PETP, 63V, 10%, RM5
0	C 55	not used		1n	C 1000 P , 20%, 50V , CER
0	C 56	not used		1n	C 1000 P , 20%, 50V , CER
0	C 57	59.22.6100		10u	EL 35V, 20%, RM5
0	C 58	59.22.4221		220u	EL 16V, 20%, RM5
0	C 59	not used		1n	C 1000 P , 20%, 50V , CER
0	C 60	not used		100n	PETP, 63V, 10%, RM5
0	C 61	not used		1n	C 1000 P , 20%, 50V , CER
0	C 62	not used		68n	PETP, 63V, 10%, RM5
0	C 63	59.34.0339		3p3	CER 63V, 5%, P100
0	C 64	59.06.0473		47n	PETP, 63V, 10%, RM5
0	C 65	not used		47n	PETP, 63V, 10%, RM5
0	C 66	59.06.0103		10n	PETP, 63V, 10%, RM5
0	C 67	59.06.0683		68n	PETP, 63V, 10%, RM5
0	C 68	59.06.0683		68n	PETP, 63V, 10%, RM5
0	C 69	59.06.0683		68n	PETP, 63V, 10%, RM5
0	C 70	59.06.0683		68n	PETP, 63V, 10%, RM5
0	C 71	59.06.0683		68n	PETP, 63V, 10%, RM5
0	C 72	59.06.0683		68n	PETP, 63V, 10%, RM5
0	C 73	59.06.0683		68n	PETP, 63V, 10%, RM5
0	C 74	59.06.0683		68n	PETP, 63V, 10%, RM5
0	C 75	59.06.0683		68n	PETP, 63V, 10%, RM5
0	C 76	59.06.0683		68n	PETP, 63V, 10%, RM5
0	C 77	59.06.0683		68n	PETP, 63V, 10%, RM5
0	C 78	59.06.0683		68n	PETP, 63V, 10%, RM5
0	C 79	59.32.4102		1n	C 1000 P , 20%, 50V , CER
0	D 1	50.04.0127		BAT85	200mA, Schottky
0	D 2	50.04.0127		BAT85	200mA, Schottky
0	D 3	not used		1N4448	75V, 150mA, 4ns, DO-35
0	D 4	not used		1N4448	75V, 150mA, 4ns, DO-35
0	D 5	not used		1N4448	75V, 150mA, 4ns, DO-35
0	D 6	not used		1N4448	75V, 150mA, 4ns, DO-35
0	D 7	50.04.0125		1N4448	75V, 150mA, 4ns, DO-35
0	DL 1	50.04.2202		HLMP1790	DL HLMP - 1790 GN
0	DL 2	50.04.2202		HLMP1790	DL HLMP - 1790 GN
0	DL 3	50.04.2201		HLMP1719	DL HLMP - 1719 GB
0	DL 4	50.04.2202		HLMP1790	DL HLMP - 1790 GN
0	F 1	51.01.0119		1.6A	T 5*20 L 250V
0	IC 1	50.17.7273		ACT273	.. 74 ACT 273 .
0	IC 2	50.13.0202		CS8412	IC CS 8412-CP ,A
0	IC 3	50.11.0159		MAX1232	IC MAX 1232 CPA, DS 1232
0	IC 4	50.14.2103		HY93C46S	EEPROM 64 * 16, serial
0	IC 5	50.11.1002		LM360	High speed Comparator
0	IC 6	50.06.0245		74LS245	IC SN 74 LS 245 N TTL-3
0	IC 7	89.10.0002			DLR 6000 (LWL - MODUL) ,A
0	IC 8	1.940.940.20			SW 500 MADI (50.14.2002)
0	IC 9	50.14.0133		5585	IC HM 6264LP-15 ,A
0	IC 10	50.63.4002		XC3030A-7	LCA 3000 / 3000 PLCC84
0	IC 11	50.63.1702		CY7C130	Dualport SRAM, 1K*8
0	IC 12	50.63.0009		80C652	MPU 8bit
0	IC 13	50.17.0574		74HCT574	IC .. 74 HCT574 ., ,A
0	IC 14	50.06.1576		74ALS576	Octal D-Type FF, tri
0	IC 15	50.06.1576		74ALS576	Octal D-Type FF, tri
0	IC 16	not used		MAX9685	ECL Comparator, latching
0	IC 17	50.16.0201		SCC2691	IC SCC 2691 AE 1 N 24 ,A
0	IC 18	50.17.5652		74AC652	Octal Bus Reg/Transceiver
0	IC 19	50.14.1009		7C128A	SRAM 2K*8 35ns
0	IC 20	50.17.0573		74HCT573	IC .. 74 HCT573 ., ,A
0	IC 21	50.17.1574		74HC574	IC .. 74 HC 574 ., ,A
0	IC 22	50.17.1594		74HC594	IC .. 74 HC 594 ., ,A
0	IC 23	1.940.941.21			SW 500 MADIIN (50.14.1501)
0	IC 24	50.17.1595		74HC595	IC .. 74 HC 595 ., ,A
0	IC 25	50.15.0121		75174	IC SN 75174 N
0	IC 26	50.17.1589		74HC589	MC 74 HC 589 N
0	IC 27	50.17.1589		74HC589	MC 74 HC 589 N
0	IC 28	not used		MAX9685	ECL Comparator, latching
0	IC 29	50.17.1004		74HC04	IC .. 74 HC 04 ., ,A
0	IC 30	50.10.0124		MAX660	V-Converter ... +5.5V to -5.5V
0	IC 31	50.15.0114		9637	Dual diff Line Receiver
0	J 3	54.01.0021		Jumper	0.63 * 0.63mm
0	J 4	54.01.0021		Jumper	0.63 * 0.63mm
0	L 1	62.02.3101		100uH	10%, radial RM 5
0	L 2	62.02.3100		10uH	10%, radial RM 5
0	L 3	62.02.3100		10uH	10%, radial RM 5
0	L 4	62.02.3220		22uH	10%, radial RM 5
0	L 5	62.03.0001		10uH	1A Toroid Chocke
0	L 6	62.02.3100		10uH	10%, radial RM 5
0	L 7	not used		10uH	10%, radial RM 5
0	L 8	not used		10uH	10%, radial RM 5
0	L 9	not used		10uH	10%, radial RM 5
0	L 10	not used		10uH	10%, radial RM 5
0	L 11	not used		10uH	10%, radial RM 5
0	MP 1	1.940.500.11			D19M MADI PCB
0	MP 2	1.010.057.43			Baugruppenschild
0	MP 3	43.01.0108		Label	ESE-WARNSCHILD
0	MP 5	1.010.117.51			TEXT-ETIK. 5*20 (T1.60A)
0	MP 7	1.010.015.50		Spacer	ISOLIER-SCHEIBE ZU T0 5
0	MP 8	89.01.1499	3 pcs		QUARZ - ISOLIERPLATTE
0	MP 10	1.940.510.01	1 pce		FRONTPLATTE
0	MP 11	1.940.600.04	1 pce		GRIFFEINLAGE 4TE
0	MP 12	49.02.0520	2 pcs	M2.5*12	Rändelschraube (Rack)
0	MP 13	49.02.0521	2 pcs		Metall-Buchse (Rack)
0	MP 14	49.02.0522	2 pcs		Kartenhalter (Rack)
0	MP 15	49.02.0523	1 pce	M2.5*7	Senk-Schr, KS, Senkripp
0	MP 16	49.02.0504	1 pce	4TE	Frontplatten-Griff
0	MP 17	21.53.0279	2 pcs	M2.5*6	Z-Schraube Inbus Zn gb chr
0	MP 18	21.53.0284	1 pce	M2.5*16	Z-Schraube Inbus Zn gb chr
0	MP 19	28.99.0119	2 pcs		ROHRNIETE D 2.5*0.15* 9
0	MP 20	1.101.001.21	1 pce		TEXT-ETIK. 5*20 HARDWARE -21
0	P 1	54.11.2009		96p	EU-R 3*32p
0	P 2	54.01.0020		1p	Pin 0.63*0.63
0	P 3	54.01.0020		1p	Pin 0.63*0.63
0	P 4	54.01.0020		1p	Pin 0.63*0.63
0	P 5	54.01.0020		1p	Pin 0.63*0.63
0	P 6	54.01.0020		1p	Pin 0.63*0.63
0	P 7	54.01.0020		1p	Pin 0.63*0.63
0	P 8	54.01.0020		1p	Pin 0.63*0.63
0	P 9	54.01.0020		1p	Pin 0.63*0.63
0	P 10	54.01.0020		1p	Pin 0.63*0.63
0	P 11	54.01.0020		1p	Pin 0.63*0.63
0	P 12	54.02.0320		1p	Flatpin, 2.8*0.8mm
0	P 13	54.02.0320		1p	Flatpin, 2.8*0.8mm
0	P 14	54.01.0020		1p	Pin 0.63*0.63
0	P 15	54.01.0020		1p	Pin 0.63*0.63
0	R 1	57.11.3102		1k0	MF, 1%, 0207
0	R 2	57.11.3102		1k0	MF, 1%, 0207
0	R 3	57.11.3103		10k	MF, 1%, 0207
0	R 4	57.11.3103		10k	MF, 1%, 0207
0	R 5	57.11.3271		270R	MF, 1%, 0207
0	R 6	57.11.3150		15R	MF, 1%, 0207
0	R 7	57.11.3103		10k	MF, 1%, 0207
0	R 8	57.11.3103		10k	MF, 1%, 0207
0	R 9	57.11.3102		1k0	MF, 1%, 0207
0	R 10	57.11.3102		1k0	MF, 1%, 0207
0	R 11	57.11.3102		1k0	MF, 1%, 0207
0	R 12	57.11.3102		1k0	MF, 1%, 0207
0	R 13	57.11.3471		470R	MF, 1%, 0207
0	R 14	57.11.3271		270R	MF, 1%, 0207
0	R 15	57.11.3150		15R	MF, 1%, 0207
0	R 16	not used		470R	MF, 1%, 0207
0	R 17	57.11.3103		10k	MF, 1%, 0207
0	R 18	57.11.3102		1k0	MF, 1%, 0207
0	R 19	not used		75R	MF, 1%, 0204
0	R 20	not used		75R	MF, 1%, 0204
0	R 21	not used		330R	MF, 1%, 0204
0	R 22	not used		150R	MF, 1%, 0207
0	R 23	not used		75R	MF, 1%, 0204
0	R 24	not used		1k2	MF, 1%, 0204
0	R 25	not used		330R	MF, 1%, 0204
0	R 26	57.11.3102		1k0	MF, 1%, 0207
0	R 27	not used		330R	MF, 1%, 0204
0	R 28	not used		75R	MF, 1%, 0204
0	R 29	57.11.3103		10k	MF, 1%, 0207
0	R 30	not used		470R	MF, 1%, 0204
0	R 31	57.11.3102		1k0	MF, 1%, 0207
0	R 32	57.11.3105		1M0	MF, 1%, 0207
0	R 33	57.11.3102		1k0	MF, 1%, 0207
0	R 34	57.11.3102		1k0	MF, 1%, 0207
0	R 35	not used		470R	MF, 1%, 0204
0	R 36	57.11.3102		1k0	MF, 1%, 0207
0	R 37	57.11.3102		1k0	MF, 1%, 0207
0	RZ 1	57.88.4102		1k0	8*R Resistor-Netw 2% SIP9
0	RZ 2	57.88.4102		1k0	8*R Resistor-Netw 2% SIP9
0	RZ 3	57.88.4103		10k	8*R Resistor-Netw 2% SIP9
0	RZ 4	57.88.4333		33k	8*R Resistor-Netw 2% SIP9
0	S 1	55.03.0122		1*a	S 1 TASTE, 1*A, PRINT,IMPULS
0	T 1	53.15.0021			RF - Trafo
0	T 2	not used			IMPULSTRANSFORMATOR
0	T 3	not used			IMPULSTRANSFORMATOR
0	XDL 1	50.20.2501		Spacer	LED-Sockel
0	XDL 2	50.20.2501		Spacer	LED-Sockel
0	XDL 3	50.20.2501		Spacer	LED-Sockel
0	XF 1	53.03.0118			XF 5 * 20, PRINT-LIEGEND
0	XIC 8	53.03.0173		28p	DIL 0.6", löt, gerade
0	XIC 10	53.03.2284		PLC84p	PLCC-Socket 84p
0	XIC 11	53.03.2252		PLC52p	PLCC-Socket 52p
0	XIC 12	53.03.2244		PLC44p	PLCC-Socket 44p
0	XIC 14	53.03.0165		20p	DIL 0.3", löt, gerade
0	XIC 15	53.03.0165		20p	DIL 0.3", löt, gerade
0	XIC 23	53.03.0166		8p	DIL 0.3", löt, gerade
0	XIC 25	53.03.0168		16p	DIL 0.3", löt, gerade
0	XIC 31	53.03.0166		8p	DIL 0.3", löt, gerade
0	Y 1	89.01.1013		12.500MHz	12.500 000 MHz, HC 49/U
0	Y 2	89.01.1014		12.000MHz	12.000 000 MHz, HC 49/U
0	Y 3	89.01.1002		3.686MHz	3.686 400 MHz, HC 18/U

End of List

Comments:

D19M C4 DA Board 1.940.570.21

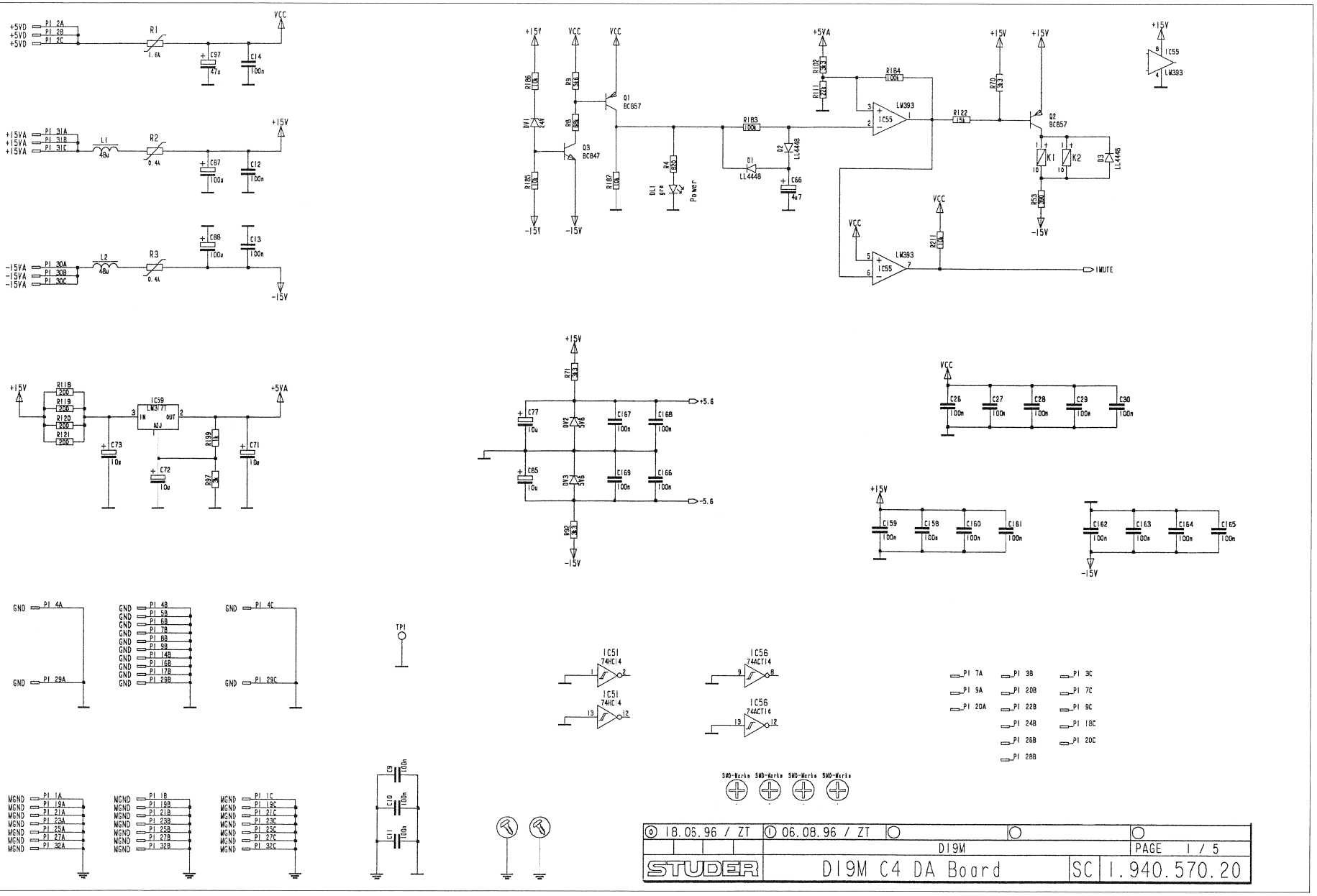

18.05.96 / ZT	06.08.96 / ZT			
		D19M		PAGE 1 / 5
STUDER	D19M C4 DA Board		SC	1.940.570.20

D19M C4 DA Board 1.940.570.21

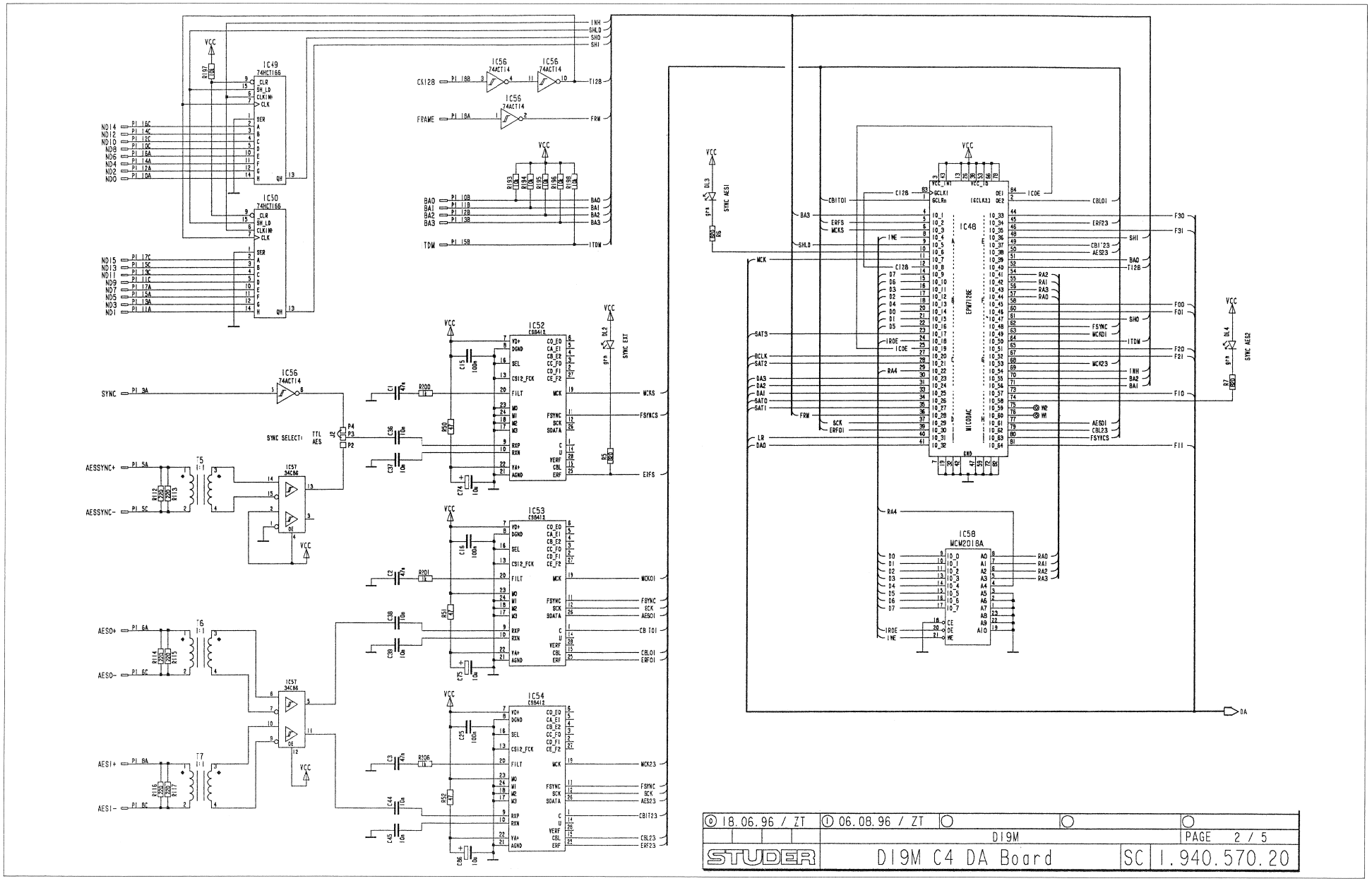

D19M C4 DA Board 1.940.570.21

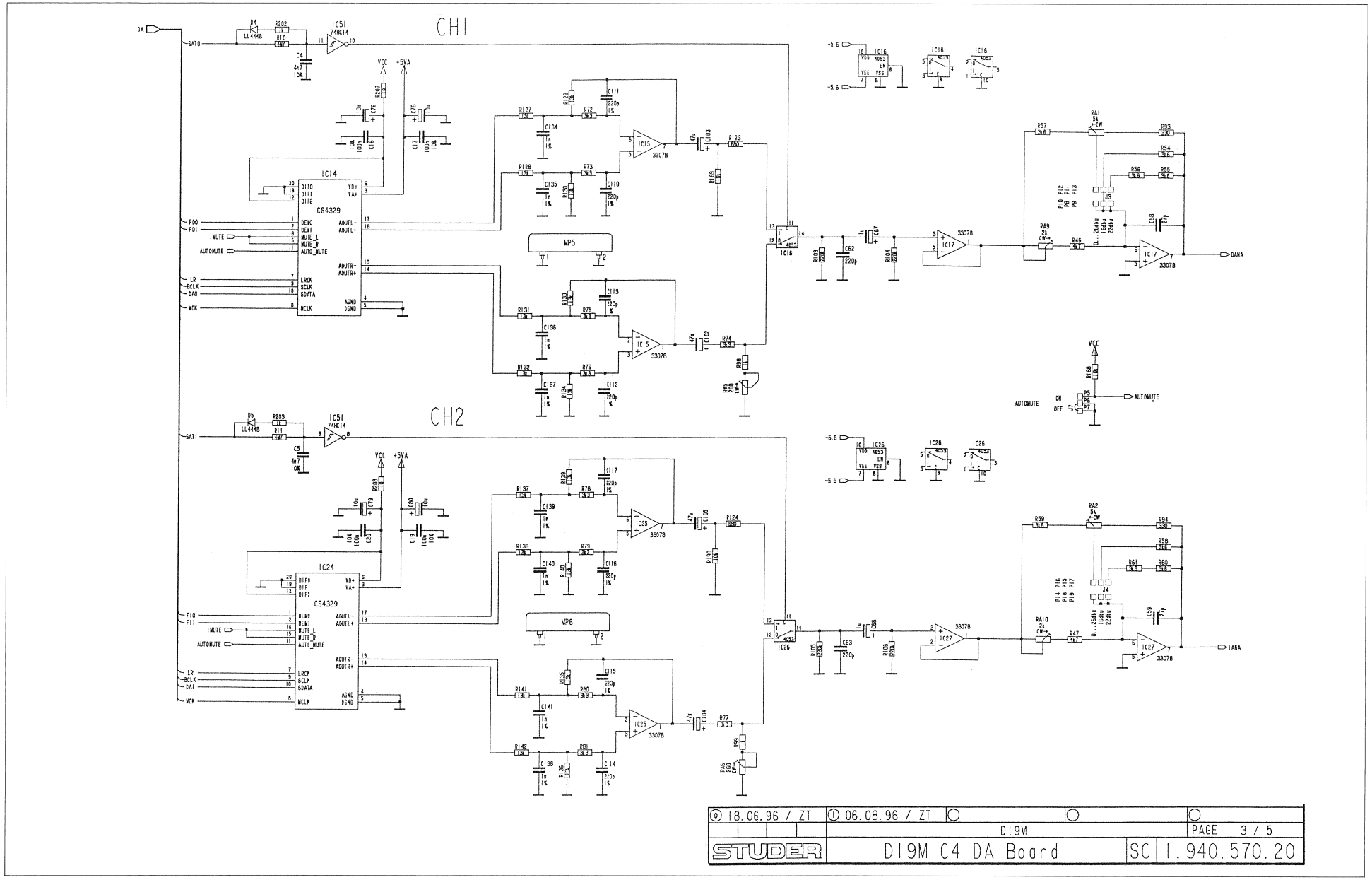

D19M C4 DA Board 1.940.570.21

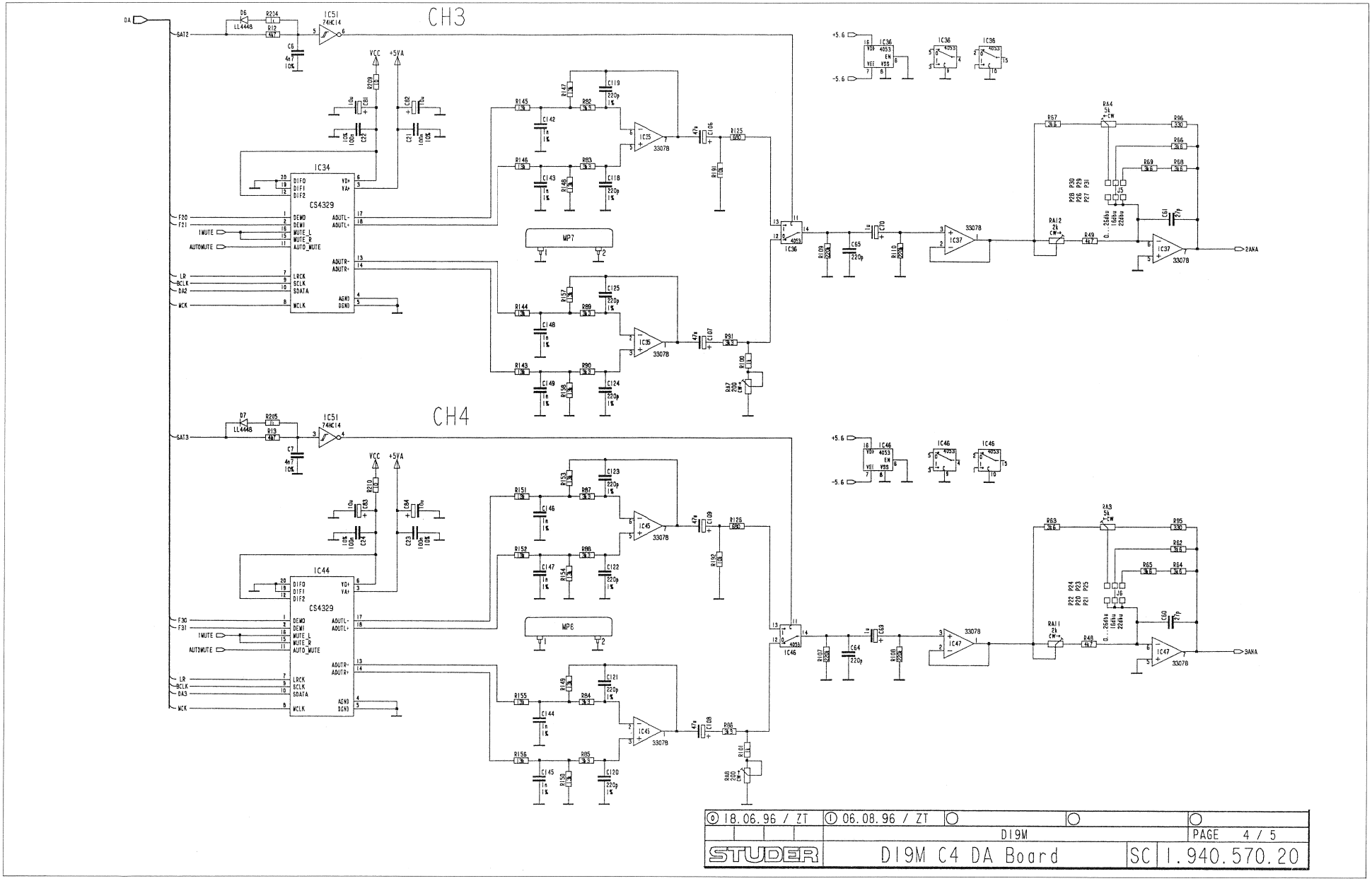

D19M C4 DA Board 1.940.570.21

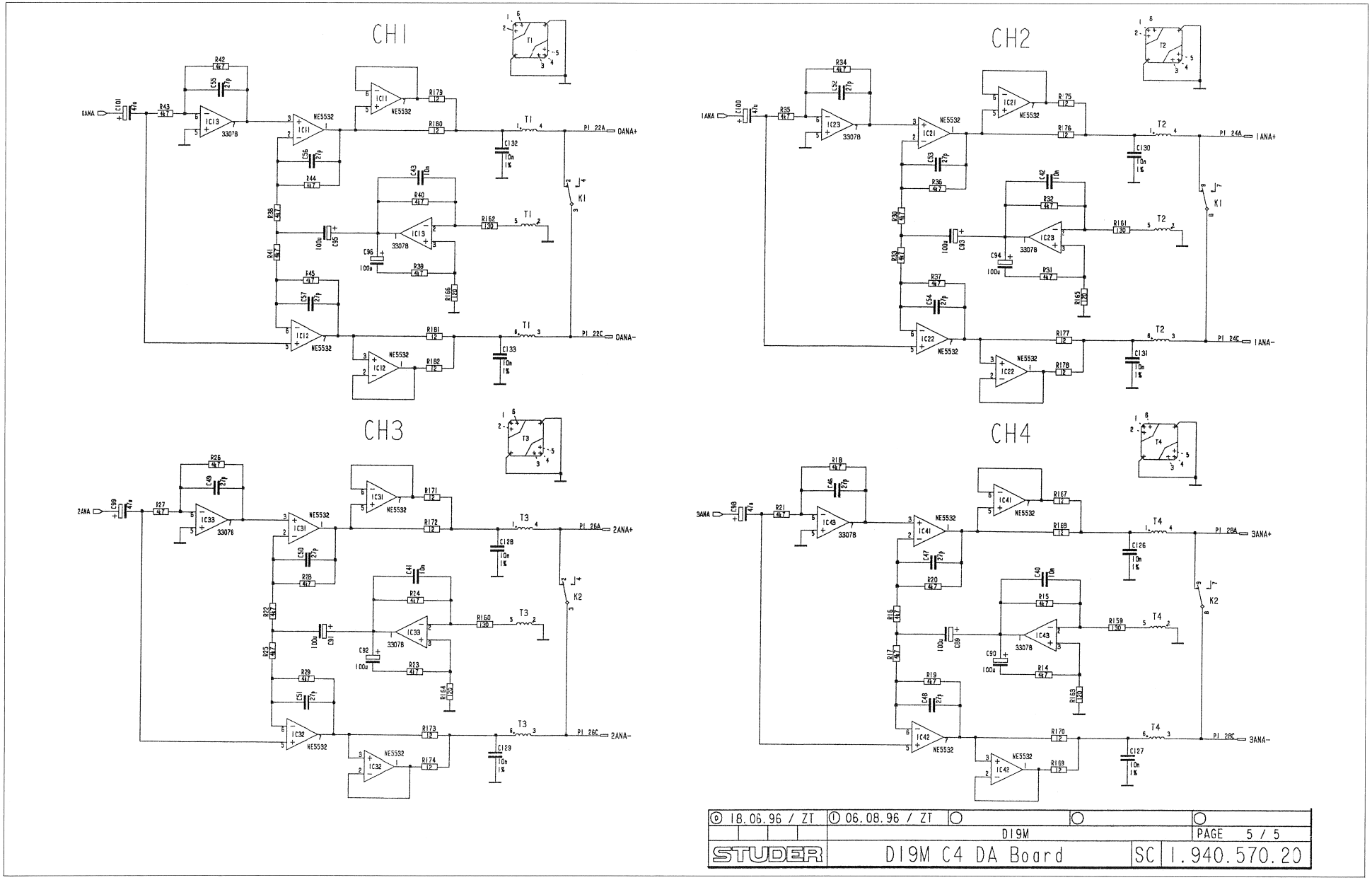

D19M C4 DA Board 1.940.570.21

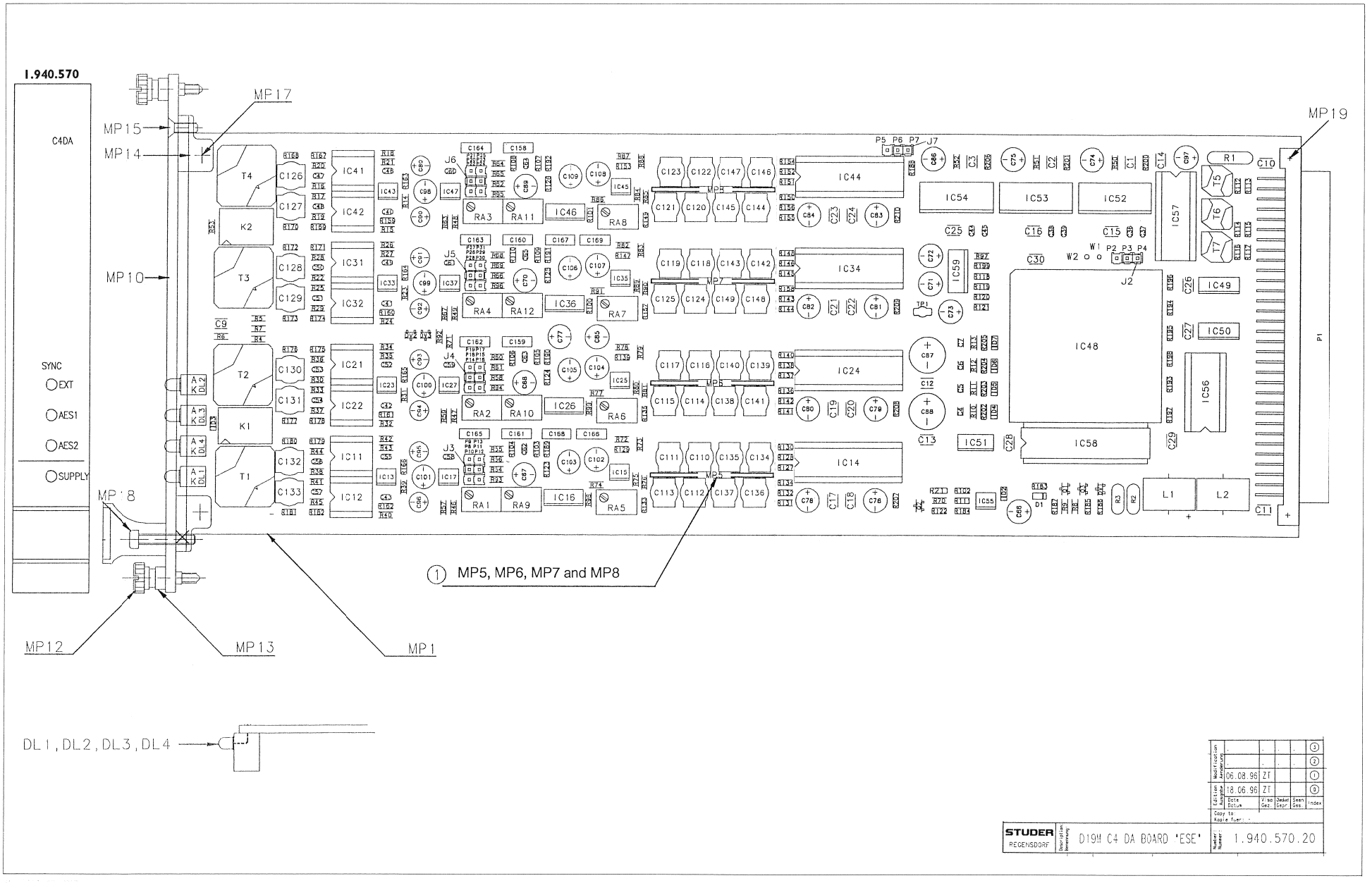

STUDER REGENSDORF — D19M C4 DA BOARD 'ESE' — 1.940.570.20

D19M C4 DA Board 1.940.570.21

Idx.	Pos.	Part No.	Qty.	Type/Val.	Description
0	C 1	59.60.1473		47n	CER 63V, 10%, X7R, 1210
0	C 2	59.60.1473		47n	CER 63V, 10%, X7R, 1210
0	C 3	59.60.1473		47n	CER 63V, 10%, X7R, 1210
0	C 4	59.60.1472		4n7	CER 63V, 10%, X7R, 0805
0	C 5	59.60.1472		4n7	CER 63V, 10%, X7R, 0805
0	C 6	59.60.1472		4n7	CER 63V, 10%, X7R, 0805
0	C 7	59.60.1472		4n7	CER 63V, 10%, X7R, 0805
0	C 9	59.60.1104		100n	CER 63V, 10%, X7R, 1210
0	C 10	59.60.1104		100n	CER 63V, 10%, X7R, 1210
0	C 11	59.60.1104		100n	CER 63V, 10%, X7R, 1210
0	C 12	59.60.1104		100n	CER 63V, 10%, X7R, 1210
0	C 13	59.60.1104		100n	CER 63V, 10%, X7R, 1210
0	C 14	59.60.1104		100n	CER 63V, 10%, X7R, 1210
0	C 15	59.60.1104		100n	CER 63V, 10%, X7R, 1210
0	C 16	59.60.1104		100n	CER 63V, 10%, X7R, 1210
0	C 17	59.60.1104		100n	CER 63V, 10%, X7R, 1210
0	C 18	59.60.1104		100n	CER 63V, 10%, X7R, 1210
0	C 19	59.60.1104		100n	CER 63V, 10%, X7R, 1210
0	C 20	59.60.1104		100n	CER 63V, 10%, X7R, 1210
0	C 21	59.60.1104		100n	CER 63V, 10%, X7R, 1210
0	C 22	59.60.1104		100n	CER 63V, 10%, X7R, 1210
0	C 23	59.60.1104		100n	CER 63V, 10%, X7R, 1210
0	C 24	59.60.1104		100n	CER 63V, 10%, X7R, 1210
0	C 25	59.60.1104		100n	CER 63V, 10%, X7R, 1210
0	C 26	59.60.1104		100n	CER 63V, 10%, X7R, 1210
0	C 27	59.60.1104		100n	CER 63V, 10%, X7R, 1210
0	C 28	59.60.1104		100n	CER 63V, 10%, X7R, 1210
0	C 29	59.60.1104		100n	CER 63V, 10%, X7R, 1210
0	C 30	59.60.1104		100n	CER 63V, 10%, X7R, 1210
0	C 36	59.60.1103		10n	CER 63V, 10%, X7R, 0805
0	C 37	59.60.1103		10n	CER 63V, 10%, X7R, 0805
0	C 38	59.60.1103		10n	CER 63V, 10%, X7R, 0805
0	C 39	59.60.1103		10n	CER 63V, 10%, X7R, 0805
0	C 40	59.60.1103		10n	CER 63V, 10%, X7R, 0805
0	C 41	59.60.1103		10n	CER 63V, 10%, X7R, 0805
0	C 42	59.60.1103		10n	CER 63V, 10%, X7R, 0805
0	C 43	59.60.1103		10n	CER 63V, 10%, X7R, 0805
0	C 44	59.60.1103		10n	CER 63V, 10%, X7R, 0805
0	C 45	59.60.1103		10n	CER 63V, 10%, X7R, 0805
0	C 46	59.60.0270		27p	CER 63V, 5%, C0G, 0805
0	C 47	59.60.0270		27p	CER 63V, 5%, C0G, 0805
0	C 48	59.60.0270		27p	CER 63V, 5%, C0G, 0805
0	C 49	59.60.0270		27p	CER 63V, 5%, C0G, 0805
0	C 50	59.60.0270		27p	CER 63V, 5%, C0G, 0805
0	C 51	59.60.0270		27p	CER 63V, 5%, C0G, 0805
0	C 52	59.60.0270		27p	CER 63V, 5%, C0G, 0805
0	C 53	59.60.0270		27p	CER 63V, 5%, C0G, 0805
0	C 54	59.60.0270		27p	CER 63V, 5%, C0G, 0805
0	C 55	59.60.0270		27p	CER 63V, 5%, C0G, 0805
0	C 56	59.60.0270		27p	CER 63V, 5%, C0G, 0805
0	C 57	59.60.0270		27p	CER 63V, 5%, C0G, 0805
0	C 58	59.60.0270		27p	CER 63V, 5%, C0G, 0805
0	C 59	59.60.0270		27p	CER 63V, 5%, C0G, 0805
0	C 60	59.60.0270		27p	CER 63V, 5%, C0G, 0805
0	C 61	59.60.0270		27p	CER 63V, 5%, C0G, 0805
0	C 62	59.60.0221		220p	CER 63V, 5%, C0G, 0805
0	C 63	59.60.0221		220p	CER 63V, 5%, C0G, 0805
0	C 64	59.60.0221		220p	CER 63V, 5%, C0G, 0805
0	C 65	59.60.0221		220p	CER 63V, 5%, C0G, 0805
0	C 66	59.22.8479		4u7	EL 50V, 20%, RM5
0	C 67	59.22.8109		1u	EL 50V, 20%, RM5
0	C 68	59.22.8109		1u	EL 50V, 20%, RM5
0	C 69	59.22.8109		1u	EL 50V, 20%, RM5
0	C 70	59.22.8109		1u	EL 50V, 20%, RM5
0	C 71	59.22.6100		10u	EL 35V, 20%, RM5
0	C 72	59.22.6100		10u	EL 35V, 20%, RM5
0	C 73	59.22.6100		10u	EL 35V, 20%, RM5
0	C 74	59.22.6100		10u	EL 35V, 20%, RM5
0	C 75	59.22.6100		10u	EL 35V, 20%, RM5
0	C 76	59.22.6100		10u	EL 35V, 20%, RM5
0	C 77	59.22.6100		10u	EL 35V, 20%, RM5
0	C 78	59.22.6100		10u	EL 35V, 20%, RM5
0	C 79	59.22.6100		10u	EL 35V, 20%, RM5
0	C 80	59.22.6100		10u	EL 35V, 20%, RM5
0	C 81	59.22.6100		10u	EL 35V, 20%, RM5
0	C 82	59.22.6100		10u	EL 35V, 20%, RM5
0	C 83	59.22.6100		10u	EL 35V, 20%, RM5
0	C 84	59.22.6100		10u	EL 35V, 20%, RM5
0	C 85	59.22.6100		10u	EL 35V, 20%, RM5
0	C 86	59.22.6100		10u	EL 35V, 20%, RM5
0	C 87	59.22.5101		100u	EL 25V, 20%, RM5
0	C 88	59.22.5101		100u	EL 25V, 20%, RM5
0	C 89	59.22.4002		100uF	EL 16V, 20%, RM5
0	C 90	59.22.4002		100uF	EL 16V, 20%, RM5
0	C 91	59.22.4002		100uF	EL 16V, 20%, RM5
0	C 92	59.22.4002		100uF	EL 16V, 20%, RM5
0	C 93	59.22.4002		100uF	EL 16V, 20%, RM5
0	C 94	59.22.4002		100uF	EL 16V, 20%, RM5
0	C 95	59.22.4002		100uF	EL 16V, 20%, RM5
0	C 96	59.22.4002		100uF	EL 16V, 20%, RM5
0	C 97	59.22.3470		47u	EL 10V, 20%, RM5
0	C 98	59.22.3470		47u	EL 10V, 20%, RM5
0	C 99	59.22.3470		47u	EL 10V, 20%, RM5
0	C 100	59.22.3470		47u	EL 10V, 20%, RM5
0	C 101	59.22.3470		47u	EL 10V, 20%, RM5
0	C 102	59.22.3470		47u	EL 10V, 20%, RM5
0	C 103	59.22.3470		47u	EL 10V, 20%, RM5
0	C 104	59.22.3470		47u	EL 10V, 20%, RM5
0	C 105	59.22.3470		47u	EL 10V, 20%, RM5
0	C 106	59.22.3470		47u	EL 10V, 20%, RM5
0	C 107	59.22.3470		47u	EL 10V, 20%, RM5
0	C 108	59.22.3470		47u	EL 10V, 20%, RM5
0	C 109	59.22.3470		47u	EL 10V, 20%, RM5
0	C 110	59.05.1221		220p	PP, 1%, 630V
0	C 111	59.05.1221		220p	PP, 1%, 630V
0	C 112	59.05.1221		220p	PP, 1%, 630V
0	C 113	59.05.1221		220p	PP, 1%, 630V
0	C 114	59.05.1221		220p	PP, 1%, 630V
0	C 115	59.05.1221		220p	PP, 1%, 630V
0	C 116	59.05.1221		220p	PP, 1%, 630V
0	C 117	59.05.1221		220p	PP, 1%, 630V
0	C 118	59.05.1221		220p	PP, 1%, 630V
0	C 119	59.05.1221		220p	PP, 1%, 630V
0	C 120	59.05.1221		220p	PP, 1%, 630V
0	C 121	59.05.1221		220p	PP, 1%, 630V
0	C 122	59.05.1221		220p	PP, 1%, 630V
0	C 123	59.05.1221		220p	PP, 1%, 630V
0	C 124	59.05.1221		220p	PP, 1%, 630V
0	C 125	59.05.1221		220p	PP, 1%, 630V
0	C 126	59.05.1103		10n	PP, 1%, 63V
0	C 127	59.05.1103		10n	PP, 1%, 63V
0	C 128	59.05.1103		10n	PP, 1%, 63V
0	C 129	59.05.1103		10n	PP, 1%, 63V
0	C 130	59.05.1103		10n	PP, 1%, 63V
0	C 131	59.05.1103		10n	PP, 1%, 63V
0	C 132	59.05.1103		10n	PP, 1%, 63V
0	C 133	59.05.1103		10n	PP, 1%, 63V
0	C 134	59.05.1102		1n0	PP, 1%, 630V
0	C 135	59.05.1102		1n0	PP, 1%, 630V
0	C 136	59.05.1102		1n0	PP, 1%, 630V
0	C 137	59.05.1102		1n0	PP, 1%, 630V
0	C 138	59.05.1102		1n0	PP, 1%, 630V
0	C 139	59.05.1102		1n0	PP, 1%, 630V
0	C 140	59.05.1102		1n0	PP, 1%, 630V
0	C 141	59.05.1102		1n0	PP, 1%, 630V
0	C 142	59.05.1102		1n0	PP, 1%, 630V
0	C 143	59.05.1102		1n0	PP, 1%, 630V
0	C 144	59.05.1102		1n0	PP, 1%, 630V
0	C 145	59.05.1102		1n0	PP, 1%, 630V
0	C 146	59.05.1102		1n0	PP, 1%, 630V
0	C 147	59.05.1102		1n0	PP, 1%, 630V
0	C 148	59.05.1102		1n0	PP, 1%, 630V
0	C 149	59.05.1102		1n0	PP, 1%, 630V
0	C 158	59.06.0104		100n	PETP, 63V, 10%, RM5
0	C 159	59.06.0104		100n	PETP, 63V, 10%, RM5
0	C 160	59.06.0104		100n	PETP, 63V, 10%, RM5
0	C 161	59.06.0104		100n	PETP, 63V, 10%, RM5
0	C 162	59.06.0104		100n	PETP, 63V, 10%, RM5
0	C 163	59.06.0104		100n	PETP, 63V, 10%, RM5
0	C 164	59.06.0104		100n	PETP, 63V, 10%, RM5
0	C 165	59.06.0104		100n	PETP, 63V, 10%, RM5
0	C 166	59.06.0104		100n	PETP, 63V, 10%, RM5
0	C 167	59.06.0104		100n	PETP, 63V, 10%, RM5
0	C 168	59.06.0104		100n	PETP, 63V, 10%, RM5
0	C 169	59.06.0104		100n	PETP, 63V, 10%, RM5
0	D 1	50.60.8001		4448	200mA 75V 4ns SOD 80
0	D 2	50.60.8001		4448	200mA 75V 4ns SOD 80
0	D 3	50.60.8001		4448	200mA 75V 4ns SOD 80
0	D 4	50.60.8001		4448	200mA 75V 4ns SOD 80
0	D 5	50.60.8001		4448	200mA 75V 4ns SOD 80
0	D 6	50.60.8001		4448	200mA 75V 4ns SOD 80
0	D 7	50.60.8001		4448	200mA 75V 4ns SOD 80
0	DL 1	50.04.2202		HLMP1790	DL HLMP - 1790 GN
0	DL 2	50.04.2202		HLMP1790	DL HLMP - 1790 GN
0	DL 3	50.04.2202		HLMP1790	DL HLMP - 1790 GN
0	DL 4	50.04.2202		HLMP1790	DL HLMP - 1790 GN
0	DV 1	50.60.9026		24V	5%, 0.2W, SOT 23
0	DV 2	50.60.9011		5V6	5%, 0.2W, SOT 23
0	DV 3	50.60.9011		5V6	5%, 0.2W, SOT 23

D19M C4 DA Board 1.940.570.21

Idx.	Pos.	Part No.	Qty.	Type/Val.	Description
0	IC 11	50.09.0106		5532AN	IC NE 5532 AN, NE 5532 AN, ,A
0	IC 12	50.09.0106		5532AN	IC NE 5532 AN, NE 5532 AN, ,A
0	IC 13	50.61.0204		MC33078	Dual Op-Amp low noise
0	IC 14	50.19.0116		CS4390	D/A Converter 24bit stereo
0	IC 15	50.61.0204		MC33078	Dual Op-Amp low noise
0	IC 16	50.62.8053		HC4053	Tripple 2ch analog mux/demux
0	IC 17	50.61.0204		MC33078	Dual Op-Amp low noise
0	IC 21	50.09.0106		5532AN	IC NE 5532 AN, NE 5532 AN, ,A
0	IC 22	50.09.0106		5532AN	IC NE 5532 AN, NE 5532 AN, ,A
0	IC 23	50.61.0204		MC33078	Dual Op-Amp low noise
0	IC 24	50.19.0116		CS4390	D/A Converter 24bit stereo
0	IC 25	50.61.0204		MC33078	Dual Op-Amp low noise
0	IC 26	50.62.8053		HC4053	Tripple 2ch analog mux/demux
0	IC 27	50.61.0204		MC33078	Dual Op-Amp low noise
0	IC 31	50.09.0106		5532AN	IC NE 5532 AN, NE 5532 AN, ,A
0	IC 32	50.09.0106		5532AN	IC NE 5532 AN, NE 5532 AN, ,A
0	IC 33	50.61.0204		MC33078	Dual Op-Amp low noise
0	IC 34	50.19.0116		CS4390	D/A Converter 24bit stereo
0	IC 35	50.61.0204		MC33078	Dual Op-Amp low noise
0	IC 36	50.62.8053		HC4053	Tripple 2ch analog mux/demux
0	IC 37	50.61.0204		MC33078	Dual Op-Amp low noise
0	IC 41	50.09.0106		5532AN	IC NE 5532 AN, NE 5532 AN, ,A
0	IC 42	50.09.0106		5532AN	IC NE 5532 AN, NE 5532 AN, ,A
0	IC 43	50.61.0204		MC33078	Dual Op-Amp low noise
0	IC 44	50.19.0116		CS4390	D/A Converter 24bit stereo
0	IC 45	50.61.0204		MC33078	Dual Op-Amp low noise
0	IC 46	50.62.8053		HC4053	Tripple 2ch analog mux/demux
0	IC 47	50.61.0204		MC33078	Dual Op-Amp low noise
0	IC 48	1.940.970.20			SW 570 MICODAC (50.63.4205)
0	IC 49	50.62.3166		74HCT166	8bit parallel in/serial out
0	IC 50	50.62.3166		74HCT166	8bit parallel in/serial out
0	IC 51	50.62.1014		74HC 14	Hey Schmitt trigger inverter
0	IC 52	50.62.0913		CS8412	AES-Receiver
0	IC 53	50.62.0913		CS8412	AES-Receiver
0	IC 54	50.62.0913		CS8412	AES-Receiver
0	IC 55	50.61.9001		LM393	Dual voltage comp. SO 8
0	IC 56	50.17.7014		ACT14	.. 74 ACT 14 .
0	IC 57	50.15.0128		34C86	IC DS 34 C 86 TN, MC34C86P ,A
0	IC 58	50.14.1009		7C128A	SRAM 2K*8 35ns
0	IC 59	50.10.0104		LM317SP	IC LM 317 SP, ..T,
0	J 2	54.01.0021		Jumper	0.63 * 0.63mm
0	J 3	54.01.0021		Jumper	0.63 * 0.63mm
0	J 4	54.01.0021		Jumper	0.63 * 0.63mm
0	J 5	54.01.0021		Jumper	0.63 * 0.63mm
0	J 6	54.01.0021		Jumper	0.63 * 0.63mm
0	J 7	54.01.0021		Jumper	0.63 * 0.63mm
0	K 1	56.04.0197		2u	24V 125V 2A Ag/Au
0	K 2	56.04.0197		2u	24V 125V 2A Ag/Au
0	L 1	62.03.0010		48uH	2A Toroid Chocke
0	L 2	62.03.0010		48uH	2A Toroid Chocke
0	MP 1	1.940.570.12			D19M C4 DA BOARD PCB
0	MP 2	1.940.570.04			TYPENSCHILD
0	MP 3	43.01.0108		Label	ESE-WARNSCHILD
0	MP 4	1.101.001.21			TEXT-ETIK. 5*20 HARDWARE -21
0	MP 5	1.940.570.02			Abschirmblech
0	MP 6	1.940.570.02			Abschirmblech
0	MP 7	1.940.570.02			Abschirmblech
0	MP 8	1.940.570.02			Abschirmblech
0	MP 10	1.940.570.01	1 pce		FRONTPLATTE
0	MP 11	1.940.600.04	1 pce		GRIFFEINLAGE 4TE
0	MP 12	49.02.0520	2 pcs	M2.5*12	Rändelschraube (Rack)
0	MP 13	49.02.0521	2 pcs		Metall-Buchse (Rack)
0	MP 14	49.02.0522	2 pcs		Kartenhalter (Rack)
0	MP 15	49.02.0523	1 pce	M2.5*7	Senk-Schr, KS, Senkripp
0	MP 16	49.02.0504	1 pce	4TE	Frontplatten-Griff
0	MP 17	21.53.0279	2 pcs	M2.5*6	Z-Schraube Inbus Zn gb chr
0	MP 18	21.53.0284	1 pce	M2.5*16	Z-Schraube Inbus Zn gb chr
0	MP 19	28.99.0119	2 pcs		ROHRNIETE D 2.5*0.15* 9
0	P 1	54.11.2009	1 pce	96p	EU-R 3*32p
0	P 2	54.01.0020	1 pce	1p	Pin 0.63*0.63
0	P 3	54.01.0020	1 pce	1p	Pin 0.63*0.63
0	P 4	54.01.0020	1 pce	1p	Pin 0.63*0.63
0	P 5	54.01.0020	1 pce	1p	Pin 0.63*0.63
0	P 6	54.01.0020	1 pce	1p	Pin 0.63*0.63
0	P 7	54.01.0020	1 pce	1p	Pin 0.63*0.63
0	P 8	54.11.0136	1 pce	2*3p	Pin 0.63*0.63, RM2.54
0	P 9	54.01.0020	0 pce	1p	Pin 0.63*0.63
0	P 10	54.01.0020	0 pce	1p	Pin 0.63*0.63
0	P 11	54.01.0020	0 pce	1p	Pin 0.63*0.63
0	P 12	54.01.0020	0 pce	1p	Pin 0.63*0.63
0	P 13	54.01.0020	0 pce	1p	Pin 0.63*0.63
0	P 14	54.11.0136	1 pce	2*3p	Pin 0.63*0.63, RM2.54
0	P 15	54.01.0020	0 pce	1p	Pin 0.63*0.63
0	P 16	54.01.0020	0 pce	1p	Pin 0.63*0.63
0	P 17	54.01.0020	0 pce	1p	Pin 0.63*0.63
0	P 18	54.01.0020	0 pce	1p	Pin 0.63*0.63
0	P 19	54.01.0020	0 pce	1p	Pin 0.63*0.63
0	P 20	54.11.0136	1 pce	2*3p	Pin 0.63*0.63, RM2.54
0	P 21	54.01.0020	0 pce	1p	Pin 0.63*0.63
0	P 22	54.01.0020	0 pce	1p	Pin 0.63*0.63
0	P 23	54.01.0020	0 pce	1p	Pin 0.63*0.63
0	P 24	54.01.0020	0 pce	1p	Pin 0.63*0.63
0	P 25	54.01.0020	0 pce	1p	Pin 0.63*0.63
0	P 26	54.11.0136	1 pce	2*3p	Pin 0.63*0.63, RM2.54
0	P 27	54.01.0020	0 pce	1p	Pin 0.63*0.63
0	P 28	54.01.0020	0 pce	1p	Pin 0.63*0.63
0	P 29	54.01.0020	0 pce	1p	Pin 0.63*0.63
0	P 30	54.01.0020	0 pce	1p	Pin 0.63*0.63
0	P 31	54.01.0020	0 pce	1p	Pin 0.63*0.63
0	Q 1	50.60.1001		BC857B	PNP 45V 100mA SOT 23
0	Q 2	50.60.1001		BC857B	PNP 45V 100mA SOT 23
0	Q 3	50.60.0001		BC847B	NPN 45V 100mA SOT 23
0	R 1	57.92.7053		1.6A	POLY- PTC, 30V
0	R 2	57.92.7019		0.4A	POLY- PTC, 60V
0	R 3	57.92.7019		0.4A	POLY- PTC, 60V
0	R 4	57.60.1821		820R	MF, 1%, 0204, E24
0	R 5	57.60.1821		820R	MF, 1%, 0204, E24
0	R 6	57.60.1821		820R	MF, 1%, 0204, E24
0	R 7	57.60.1821		820R	MF, 1%, 0204, E24
0	R 8	57.60.1683		68K	MF, 1%, 0204, E24
0	R 9	57.60.1562		5K6	MF, 1%, 0204, E24
0	R 10	57.60.1475		4M7	MF, 1%, 0204, E24
0	R 11	57.60.1475		4M7	MF, 1%, 0204, E24
0	R 12	57.60.1475		4M7	MF, 1%, 0204, E24
0	R 13	57.60.1475		4M7	MF, 1%, 0204, E24
0	R 14	57.60.1472		4K7	MF, 1%, 0204, E24
0	R 15	57.60.1472		4K7	MF, 1%, 0204, E24
0	R 16	57.60.1472		4K7	MF, 1%, 0204, E24
0	R 17	57.60.1472		4K7	MF, 1%, 0204, E24
0	R 18	57.60.1472		4K7	MF, 1%, 0204, E24
0	R 19	57.60.1472		4K7	MF, 1%, 0204, E24
0	R 20	57.60.1472		4K7	MF, 1%, 0204, E24
0	R 21	57.60.1472		4K7	MF, 1%, 0204, E24
0	R 22	57.60.1472		4K7	MF, 1%, 0204, E24
0	R 23	57.60.1472		4K7	MF, 1%, 0204, E24
0	R 24	57.60.1472		4K7	MF, 1%, 0204, E24
0	R 25	57.60.1472		4K7	MF, 1%, 0204, E24
0	R 26	57.60.1472		4K7	MF, 1%, 0204, E24
0	R 27	57.60.1472		4K7	MF, 1%, 0204, E24
0	R 28	57.60.1472		4K7	MF, 1%, 0204, E24
0	R 29	57.60.1472		4K7	MF, 1%, 0204, E24
0	R 30	57.60.1472		4K7	MF, 1%, 0204, E24
0	R 31	57.60.1472		4K7	MF, 1%, 0204, E24
0	R 32	57.60.1472		4K7	MF, 1%, 0204, E24
0	R 33	57.60.1472		4K7	MF, 1%, 0204, E24
0	R 34	57.60.1472		4K7	MF, 1%, 0204, E24
0	R 35	57.60.1472		4K7	MF, 1%, 0204, E24
0	R 36	57.60.1472		4K7	MF, 1%, 0204, E24
0	R 37	57.60.1472		4K7	MF, 1%, 0204, E24
0	R 38	57.60.1472		4K7	MF, 1%, 0204, E24
0	R 39	57.60.1472		4K7	MF, 1%, 0204, E24
0	R 40	57.60.1472		4K7	MF, 1%, 0204, E24
0	R 41	57.60.1472		4K7	MF, 1%, 0204, E24
0	R 42	57.60.1472		4K7	MF, 1%, 0204, E24
0	R 43	57.60.1472		4K7	MF, 1%, 0204, E24
0	R 44	57.60.1472		4K7	MF, 1%, 0204, E24
0	R 45	57.60.1472		4K7	MF, 1%, 0204, E24
0	R 46	57.60.1472		4K7	MF, 1%, 0204, E24
0	R 47	57.60.1472		4K7	MF, 1%, 0204, E24
0	R 48	57.60.1472		4K7	MF, 1%, 0204, E24
0	R 49	57.60.1472		4K7	MF, 1%, 0204, E24
0	R 50	57.60.1470		47R	MF, 1%, 0204, E24
0	R 51	57.60.1470		47R	MF, 1%, 0204, E24
0	R 52	57.60.1470		47R	MF, 1%, 0204, E24
0	R 53	57.60.1391		390R	MF, 1%, 0204, E24
0	R 54	57.60.1362		3K6	MF, 1%, 0204, E24
0	R 55	57.60.1362		3K6	MF, 1%, 0204, E24
0	R 56	57.60.1362		3K6	MF, 1%, 0204, E24
0	R 57	57.60.1362		3K6	MF, 1%, 0204, E24
0	R 58	57.60.1362		3K6	MF, 1%, 0204, E24
0	R 59	57.60.1362		3K6	MF, 1%, 0204, E24
0	R 60	57.60.1362		3K6	MF, 1%, 0204, E24
0	R 61	57.60.1362		3K6	MF, 1%, 0204, E24
0	R 62	57.60.1362		3K6	MF, 1%, 0204, E24
0	R 63	57.60.1362		3K6	MF, 1%, 0204, E24
0	R 64	57.60.1362		3K6	MF, 1%, 0204, E24

D19M C4 DA Board 1.940.570.21

Idx.	Pos.	Part No.	Qty.	Type/Val.	Description
0	R 65	57.60.1362		3K6	MF, 1%, 0204, E24
0	R 66	57.60.1362		3K6	MF, 1%, 0204, E24
0	R 67	57.60.1362		3K6	MF, 1%, 0204, E24
0	R 68	57.60.1362		3K6	MF, 1%, 0204, E24
0	R 69	57.60.1362		3K6	MF, 1%, 0204, E24
0	R 70	57.60.1332		3K3	MF, 1%, 0204, E24
0	R 71	57.60.1332		3K3	MF, 1%, 0204, E24
0	R 72	57.60.1332		3K3	MF, 1%, 0204, E24
0	R 73	57.60.1332		3K3	MF, 1%, 0204, E24
0	R 74	57.60.1332		3K3	MF, 1%, 0204, E24
0	R 75	57.60.1332		3K3	MF, 1%, 0204, E24
0	R 76	57.60.1332		3K3	MF, 1%, 0204, E24
0	R 77	57.60.1332		3K3	MF, 1%, 0204, E24
0	R 78	57.60.1332		3K3	MF, 1%, 0204, E24
0	R 79	57.60.1332		3K3	MF, 1%, 0204, E24
0	R 80	57.60.1332		3K3	MF, 1%, 0204, E24
0	R 81	57.60.1332		3K3	MF, 1%, 0204, E24
0	R 82	57.60.1332		3K3	MF, 1%, 0204, E24
0	R 83	57.60.1332		3K3	MF, 1%, 0204, E24
0	R 84	57.60.1332		3K3	MF, 1%, 0204, E24
0	R 85	57.60.1332		3K3	MF, 1%, 0204, E24
0	R 86	57.60.1332		3K3	MF, 1%, 0204, E24
0	R 87	57.60.1332		3K3	MF, 1%, 0204, E24
0	R 88	57.60.1332		3K3	MF, 1%, 0204, E24
0	R 89	57.60.1332		3K3	MF, 1%, 0204, E24
0	R 90	57.60.1332		3K3	MF, 1%, 0204, E24
0	R 91	57.60.1332		3K3	MF, 1%, 0204, E24
0	R 92	57.60.1332		3K3	MF, 1%, 0204, E24
0	R 93	57.60.1331		330R	MF, 1%, 0204, E24
0	R 94	57.60.1331		330R	MF, 1%, 0204, E24
0	R 95	57.60.1331		330R	MF, 1%, 0204, E24
0	R 96	57.60.1331		330R	MF, 1%, 0204, E24
0	R 97	57.60.1302		3K0	MF, 1%, 0204, E24
0	R 98	57.60.1102		1K	MF, 1%, 0204, E24
0	R 99	57.60.1102		1K	MF, 1%, 0204, E24
0	R 100	57.60.1102		1K	MF, 1%, 0204, E24
0	R 101	57.60.1102		1K	MF, 1%, 0204, E24
0	R 102	57.60.1332		3K3	MF, 1%, 0204, E24
0	R 103	57.60.1224		220K	MF, 1%, 0204, E24
0	R 104	57.60.1224		220K	MF, 1%, 0204, E24
0	R 105	57.60.1224		220K	MF, 1%, 0204, E24
0	R 106	57.60.1224		220K	MF, 1%, 0204, E24
0	R 107	57.60.1224		220K	MF, 1%, 0204, E24
0	R 108	57.60.1224		220K	MF, 1%, 0204, E24
0	R 109	57.60.1224		220K	MF, 1%, 0204, E24
0	R 110	57.60.1224		220K	MF, 1%, 0204, E24
0	R 111	57.60.1223		22K	MF, 1%, 0204, E24
0	R 112	57.60.1221		220R	MF, 1%, 0204, E24
0	R 113	57.60.1221		220R	MF, 1%, 0204, E24
0	R 114	57.60.1221		220R	MF, 1%, 0204, E24
0	R 115	57.60.1221		220R	MF, 1%, 0204, E24
0	R 116	57.60.1221		220R	MF, 1%, 0204, E24
0	R 117	57.60.1221		220R	MF, 1%, 0204, E24
0	R 118	57.60.1201		200R	MF, 1%, 0204, E24
0	R 119	57.60.1201		200R	MF, 1%, 0204, E24
0	R 120	57.60.1201		200R	MF, 1%, 0204, E24
0	R 121	57.60.1201		200R	MF, 1%, 0204, E24
0	R 122	57.60.1153		15K	MF, 1%, 0204, E24
0	R 123	57.60.1681		680R	MF, 1%, 0204, E24
0	R 124	57.60.1681		680R	MF, 1%, 0204, E24
0	R 125	57.60.1681		680R	MF, 1%, 0204, E24
0	R 126	57.60.1681		680R	MF, 1%, 0204, E24
0	R 127	57.60.1133		13K	MF, 1%, 0204, E24
0	R 128	57.60.1133		13K	MF, 1%, 0204, E24
0	R 129	57.60.1133		13K	MF, 1%, 0204, E24
0	R 130	57.60.1133		13K	MF, 1%, 0204, E24
0	R 131	57.60.1133		13K	MF, 1%, 0204, E24
0	R 132	57.60.1133		13K	MF, 1%, 0204, E24
0	R 133	57.60.1133		13K	MF, 1%, 0204, E24
0	R 134	57.60.1133		13K	MF, 1%, 0204, E24
0	R 135	57.60.1133		13K	MF, 1%, 0204, E24
0	R 136	57.60.1133		13K	MF, 1%, 0204, E24
0	R 137	57.60.1133		13K	MF, 1%, 0204, E24
0	R 138	57.60.1133		13K	MF, 1%, 0204, E24
0	R 139	57.60.1133		13K	MF, 1%, 0204, E24
0	R 140	57.60.1133		13K	MF, 1%, 0204, E24
0	R 141	57.60.1133		13K	MF, 1%, 0204, E24
0	R 142	57.60.1133		13K	MF, 1%, 0204, E24
0	R 143	57.60.1133		13K	MF, 1%, 0204, E24
0	R 144	57.60.1133		13K	MF, 1%, 0204, E24
0	R 145	57.60.1133		13K	MF, 1%, 0204, E24
0	R 146	57.60.1133		13K	MF, 1%, 0204, E24
0	R 147	57.60.1133		13K	MF, 1%, 0204, E24
0	R 148	57.60.1133		13K	MF, 1%, 0204, E24
0	R 149	57.60.1133		13K	MF, 1%, 0204, E24
0	R 150	57.60.1133		13K	MF, 1%, 0204, E24
0	R 151	57.60.1133		13K	MF, 1%, 0204, E24
0	R 152	57.60.1133		13K	MF, 1%, 0204, E24
0	R 153	57.60.1133		13K	MF, 1%, 0204, E24
0	R 154	57.60.1133		13K	MF, 1%, 0204, E24
0	R 155	57.60.1133		13K	MF, 1%, 0204, E24
0	R 156	57.60.1133		13K	MF, 1%, 0204, E24
0	R 157	57.60.1133		13K	MF, 1%, 0204, E24
0	R 158	57.60.1133		13K	MF, 1%, 0204, E24
0	R 159	57.60.1131		130R	MF, 1%, 0204, E24
0	R 160	57.60.1131		130R	MF, 1%, 0204, E24
0	R 161	57.60.1131		130R	MF, 1%, 0204, E24
0	R 162	57.60.1131		130R	MF, 1%, 0204, E24
0	R 163	57.60.1121		120R	MF, 1%, 0204, E24
0	R 164	57.60.1121		120R	MF, 1%, 0204, E24
0	R 165	57.60.1121		120R	MF, 1%, 0204, E24
0	R 166	57.60.1121		120R	MF, 1%, 0204, E24
0	R 167	57.60.1120		12R	MF, 1%, 0204, E24
0	R 168	57.60.1120		12R	MF, 1%, 0204, E24
0	R 169	57.60.1120		12R	MF, 1%, 0204, E24
0	R 170	57.60.1120		12R	MF, 1%, 0204, E24
0	R 171	57.60.1120		12R	MF, 1%, 0204, E24
0	R 172	57.60.1120		12R	MF, 1%, 0204, E24
0	R 173	57.60.1120		12R	MF, 1%, 0204, E24
0	R 174	57.60.1120		12R	MF, 1%, 0204, E24
0	R 175	57.60.1120		12R	MF, 1%, 0204, E24
0	R 176	57.60.1120		12R	MF, 1%, 0204, E24
0	R 177	57.60.1120		12R	MF, 1%, 0204, E24
0	R 178	57.60.1120		12R	MF, 1%, 0204, E24
0	R 179	57.60.1120		12R	MF, 1%, 0204, E24
0	R 180	57.60.1120		12R	MF, 1%, 0204, E24
0	R 181	57.60.1120		12R	MF, 1%, 0204, E24
0	R 182	57.60.1120		12R	MF, 1%, 0204, E24
0	R 183	57.60.1104		100K	MF, 1%, 0204, E24
0	R 184	57.60.1104		100K	MF, 1%, 0204, E24
0	R 185	57.60.1103		10K	MF, 1%, 0204, E24
0	R 186	57.60.1103		10K	MF, 1%, 0204, E24
0	R 187	57.60.1103		10K	MF, 1%, 0204, E24
0	R 188	57.60.1103		10K	MF, 1%, 0204, E24
0	R 189	57.60.1103		10K	MF, 1%, 0204, E24
0	R 190	57.60.1103		10K	MF, 1%, 0204, E24
0	R 191	57.60.1103		10K	MF, 1%, 0204, E24
0	R 192	57.60.1103		10K	MF, 1%, 0204, E24
0	R 193	57.60.1103		10K	MF, 1%, 0204, E24
0	R 194	57.60.1103		10K	MF, 1%, 0204, E24
0	R 195	57.60.1103		10K	MF, 1%, 0204, E24
0	R 196	57.60.1103		10K	MF, 1%, 0204, E24
0	R 197	57.60.1103		10K	MF, 1%, 0204, E24
0	R 198	57.60.1103		10K	MF, 1%, 0204, E24
0	R 199	57.60.1102		1K	MF, 1%, 0204, E24
0	R 200	57.60.1102		1K	MF, 1%, 0204, E24
0	R 201	57.60.1102		1K	MF, 1%, 0204, E24
0	R 202	57.60.1102		1K	MF, 1%, 0204, E24
0	R 203	57.60.1102		1K	MF, 1%, 0204, E24
0	R 204	57.60.1102		1K	MF, 1%, 0204, E24
0	R 205	57.60.1102		1K	MF, 1%, 0204, E24
0	R 206	57.60.1102		1K	MF, 1%, 0204, E24
0	R 207	57.60.1100		10R	MF, 1%, 0204, E24
0	R 208	57.60.1100		10R	MF, 1%, 0204, E24
0	R 209	57.60.1100		10R	MF, 1%, 0204, E24
0	R 210	57.60.1100		10R	MF, 1%, 0204, E24
0	R 211	57.60.1103		10K	MF, 1%, 0204, E24
0	RA 1	58.05.1502		5k	10%, 0.5W, Cermet
0	RA 2	58.05.1502		5k	10%, 0.5W, Cermet
0	RA 3	58.05.1502		5k	10%, 0.5W, Cermet
0	RA 4	58.05.1502		5k	10%, 0.5W, Cermet
0	RA 5	58.05.1201		200R	10%, 0.5W, Cermet
0	RA 6	58.05.1201		200R	10%, 0.5W, Cermet
0	RA 7	58.05.1201		200R	10%, 0.5W, Cermet
0	RA 8	58.05.1201		200R	10%, 0.5W, Cermet
0	RA 9	58.05.1202		2k	10%, 0.5W, Cermet
0	RA 10	58.05.1202		2k	10%, 0.5W, Cermet
0	RA 11	58.05.1202		2k	10%, 0.5W, Cermet
0	RA 12	58.05.1202		2k	10%, 0.5W, Cermet
0	T 1	1.022.275.00			TRIFILARTRAFO OUTPUT
0	T 2	1.022.275.00			TRIFILARTRAFO OUTPUT
0	T 3	1.022.275.00			TRIFILARTRAFO OUTPUT
0	T 4	1.022.275.00			TRIFILARTRAFO OUTPUT
0	T 5	1.022.632.00		1:1	DI/DO TRANSFORMER
0	T 6	1.022.632.00		1:1	DI/DO TRANSFORMER
0	T 7	1.022.632.00		1:1	DI/DO TRANSFORMER
0	TP 1	54.02.0320		1p	PCB-Flachst 2.8*0.8, gerade

D19M C4 DA Board 1.940.570.21

Idx.	Pos.	Part No.	Qty.	Type/Val.	Description
0	XDL 1	50.20.2501		Spacer	LED-Sockel
0	XDL 2	50.20.2501		Spacer	LED-Sockel
0	XDL 3	50.20.2501		Spacer	LED-Sockel
0	XDL 4	50.20.2501		Spacer	LED-Sockel
0	XIC 11	53.03.0166		8p	DIL 0.3", löt, gerade
0	XIC 12	53.03.0166		8p	DIL 0.3", löt, gerade
0	XIC 21	53.03.0166		8p	DIL 0.3", löt, gerade
0	XIC 22	53.03.0166		8p	DIL 0.3", löt, gerade
0	XIC 31	53.03.0166		8p	DIL 0.3", löt, gerade
0	XIC 32	53.03.0166		8p	DIL 0.3", löt, gerade
0	XIC 41	53.03.0166		8p	DIL 0.3", löt, gerade
0	XIC 42	53.03.0166		8p	DIL 0.3", löt, gerade
0	XIC 48	53.03.2284		PLCC84p	PLCC-Socket 84p

End of List

Comments:

D19M AESO Board 1.940.585.21

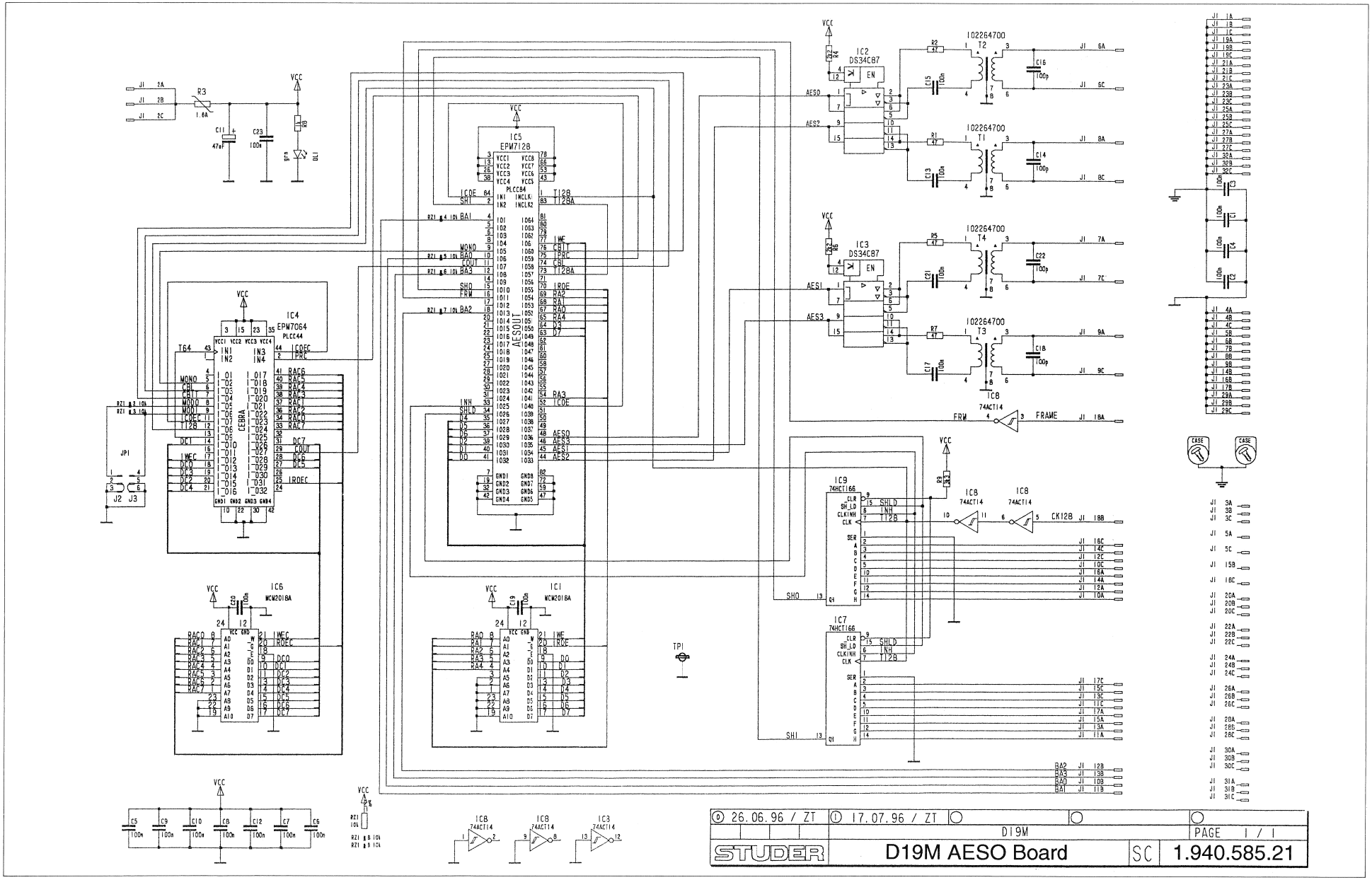

D19M AESO Board 1.940.585.21

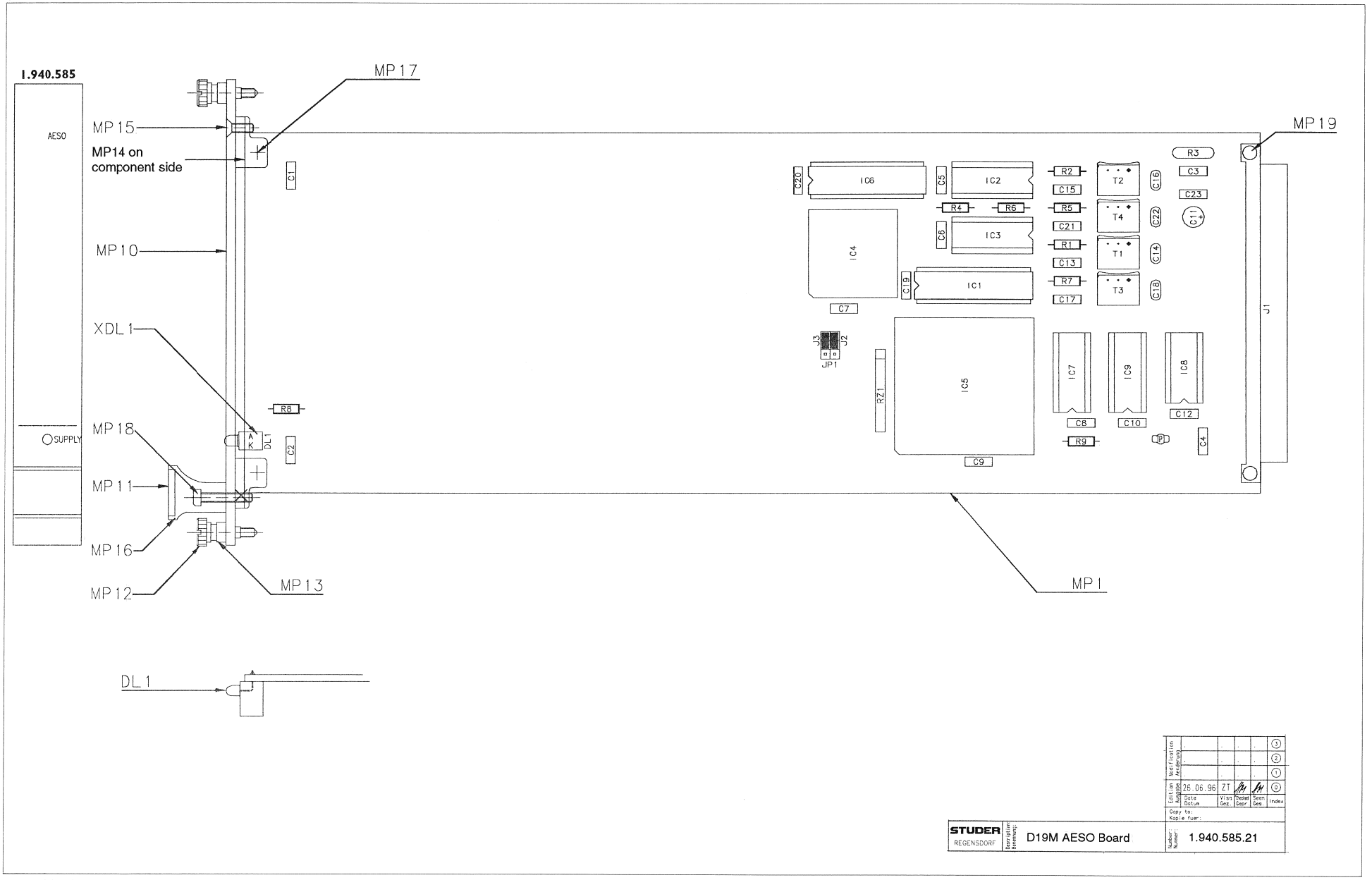

D19M AESO Board 1.940.585.21

Idx.	Pos.	Part No.	Qty.	Type/Val.	Description
0	C 1	59.06.0104		100n	PETP, 63V, 10%, RM5
0	C 2	59.06.0104		100n	PETP, 63V, 10%, RM5
0	C 3	59.06.0104		100n	PETP, 63V, 10%, RM5
0	C 4	59.06.0104		100n	PETP, 63V, 10%, RM5
0	C 5	59.06.0104		100n	PETP, 63V, 10%, RM5
0	C 6	59.06.0104		100n	PETP, 63V, 10%, RM5
0	C 7	59.06.0104		100n	PETP, 63V, 10%, RM5
0	C 8	59.06.0104		100n	PETP, 63V, 10%, RM5
0	C 9	59.06.0104		100n	PETP, 63V, 10%, RM5
0	C 10	59.06.0104		100n	PETP, 63V, 10%, RM5
0	C 11	59.22.3470		47u	EL 10V, 20%, RM5
0	C 12	59.06.0104		100n	PETP, 63V, 10%, RM5
0	C 13	59.06.0104		100n	PETP, 63V, 10%, RM5
0	C 14	59.34.4101		100p	CER 63V, 5%, N750
0	C 15	59.06.0104		100n	PETP, 63V, 10%, RM5
0	C 16	59.34.4101		100p	CER 63V, 5%, N750
0	C 17	59.06.0104		100n	PETP, 63V, 10%, RM5
0	C 18	59.34.4101		100p	CER 63V, 5%, N750
0	C 19	59.06.0104		100n	PETP, 63V, 10%, RM5
0	C 20	59.06.0104		100n	PETP, 63V, 10%, RM5
0	C 21	59.06.0104		100n	PETP, 63V, 10%, RM5
0	C 22	59.34.4101		100p	CER 63V, 5%, N750
0	C 23	59.06.0104		100n	PETP, 63V, 10%, RM5
0	DL 1	50.04.2202		HLMP1790	DL HLMP - 1790 GN
0	IC 1	50.14.1009		CY7C128-35	IC MCM 2018 A - 35 ,A
0	IC 2	50.15.0127		34C87	IC DS 34 C 87 TN, MC34C87P ,A
0	IC 3	50.15.0127		34C87	IC DS 34 C 87 TN, MC34C87P ,A
0	IC 4	1.940.962.21			SW 585 CEBRA (50.63.4202)
0	IC 5	1.940.964.20			SW 585 AESOUT (50.63.4205)
0	IC 6	50.14.1009		CY7C128-35	IC MCM 2018 A - 35 ,A
0	IC 7	50.17.0166		74HCT166	8 Bit parallel in/serial out
0	IC 8	50.17.7014		ACT14	.. 74 ACT 14 .
0	IC 9	50.17.0166		74HCT166	8 Bit parallel in/serial out
0	J 1	54.11.2009			J EU-R 3 * 32
0	J 2	54.01.0021		Jumper	0.63 * 0.63mm
0	J 3	54.01.0021		Jumper	0.63 * 0.63mm
0	JP 1	54.11.0136		2*3p	Pin 0.63*0.63, RM2.54
0	MP 1	1.940.585.12			D19M AESO BOARD PCB
0	MP 2	1.940.585.04			TYPENSCHILD
0	MP 3	43.01.0108	mp	Label	ESE-WARNSCHILD
0	MP 4	1.101.001.20	mp	Label	TEXT-ETIK. 5*20 HARDWARE -20
0	MP 10	1.940.585.01	1 pce		FRONTPLATTE
0	MP 11	1.940.600.04	1 pce		GRIFFEINLAGE 4TE
0	MP 12	49.02.0520	2 pcs	M2.5*12	Rändelschraube (Rack)
0	MP 13	49.02.0521	2 pcs		Metall-Buchse (Rack)
0	MP 14	49.02.0522	2 pcs		Kartenhalter (Rack)
0	MP 15	49.02.0523	1 pce	M2.5*7	Senk-Schr, KS, Senkripp
0	MP 16	49.02.0504	1 pce	4TE	Frontplatten-Griff
0	MP 17	21.53.0279	2 pcs		Z - SCHR. IS , ZN , M2.5 * 6
0	MP 18	21.53.0284	1 pce		Z - SCHR. IS , ZN , M2.5 * 16
0	MP 19	28.99.0119	2 pcs		ROHRNIETE D 2.5*0.15* 9
0	R 1	57.11.3470		47R	MF, 1%, 0207
0	R 2	57.11.3470		47R	MF, 1%, 0207
0	R 3	57.92.7053		1.6A	POLY- PTC, 30V
0	R 4	57.11.3222		2k2	MF, 1%, 0207
0	R 5	57.11.3470		47R	MF, 1%, 0207
0	R 6	57.11.3222		2k2	MF, 1%, 0207
0	R 7	57.11.3470		47R	MF, 1%, 0207
0	R 8	57.11.3102		1k0	MF, 1%, 0207
0	R 9	57.11.3332		3k3	MF, 1%, 0207
0	RZ 1	57.88.4103		8*10k	2%, SIP 9
0	T 1	1.022.647.00		1:1.4	OUTPUT TRAFO AES/EBU
0	T 2	1.022.647.00		1:1.4	OUTPUT TRAFO AES/EBU
0	T 3	1.022.647.00		1:1.4	OUTPUT TRAFO AES/EBU
0	T 4	1.022.647.00		1:1.4	OUTPUT TRAFO AES/EBU
0	TP 1	54.02.0320		1p	Flatpin, 2.8*0.8mm
0	XDL 1	50.20.2501		Spacer	LED-Sockel
0	XIC 2	53.03.0168		16p	DIL 0.3", löt, gerade
0	XIC 3	53.03.0168		16p	DIL 0.3", löt, gerade
0	XIC 4	53.03.2244		PLCC44p	PLCC-Socket 44p
0	XIC 5	53.03.2284		PLCC84p	PLCC-Socket 84p

End of List

Comments:

IC-Sockel XIC nn entsprechend den IC Nummern bestücken.
LED-Sockel XDL nn entsprechend den DL Nummern bestücken.

SCHEMATA / CIRCUIT DIAGRAMS

Connection Board S-39M C4AD/C4DA-Card 1.940.610.00

Connection Board BNC AESI-Card 1.940.611.00

Connection Board BNC AESO-Card 1.940.612.00

Connection Board S-30F-C4AD 1.940.613.00

Connection Board S-30M-C4AD 1.940.614.00

Connection Board D-15F AESI-Card 1.940.615.00

Connection Board D-15F C4AD-Card 1.940.615.00

Connection Board D-15M AESO-Card 1.940.616.00

Connection Board D-15M C4DA-Card 1.940.616.00

XLR Connection AES/EBU Input 1.940.617.81

XLR Connection AES/EBU Output 1.940.618.81

D25 + D25 Connection Unit 1.940.619.00

XLR Connection Analog Input 1.940.627.81

XLR Connection Analog Output 1.940.628.81

Connection Board 2xD-15F 8xAESI-Card 1.940.635.00

Connection Board 2xD-15M 8xAESO-Card 1.940.636.00

XLR Connection 4xAES/EBU Input 1.940.637.81

XLR Connection 4xAES/EBU Output 1.940.638.81

Connection Board S-39M C4AD / C4DA-Card 1.940.610.00

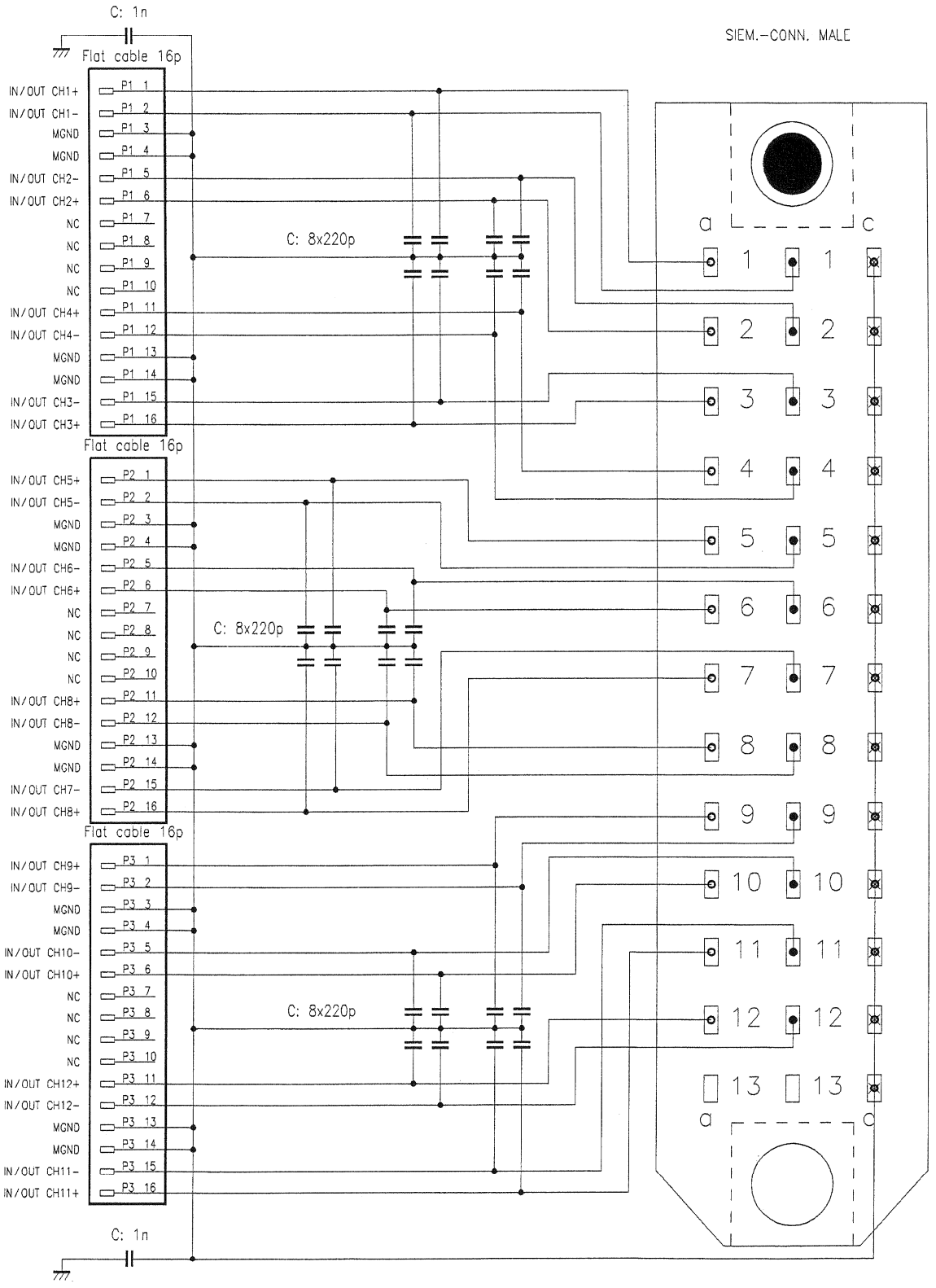

⓪ 16.7.97 GE				
PCB-S39M-ANA				PAGE 1 OF 1
STUDER REGENSDORF SWITZERLAND	CONNECTION BOARD S-39M C4AD / C4DA-CARD			1.940.610

Connection Board S-39M C4AD / C4DA-Card 1.940.610.00

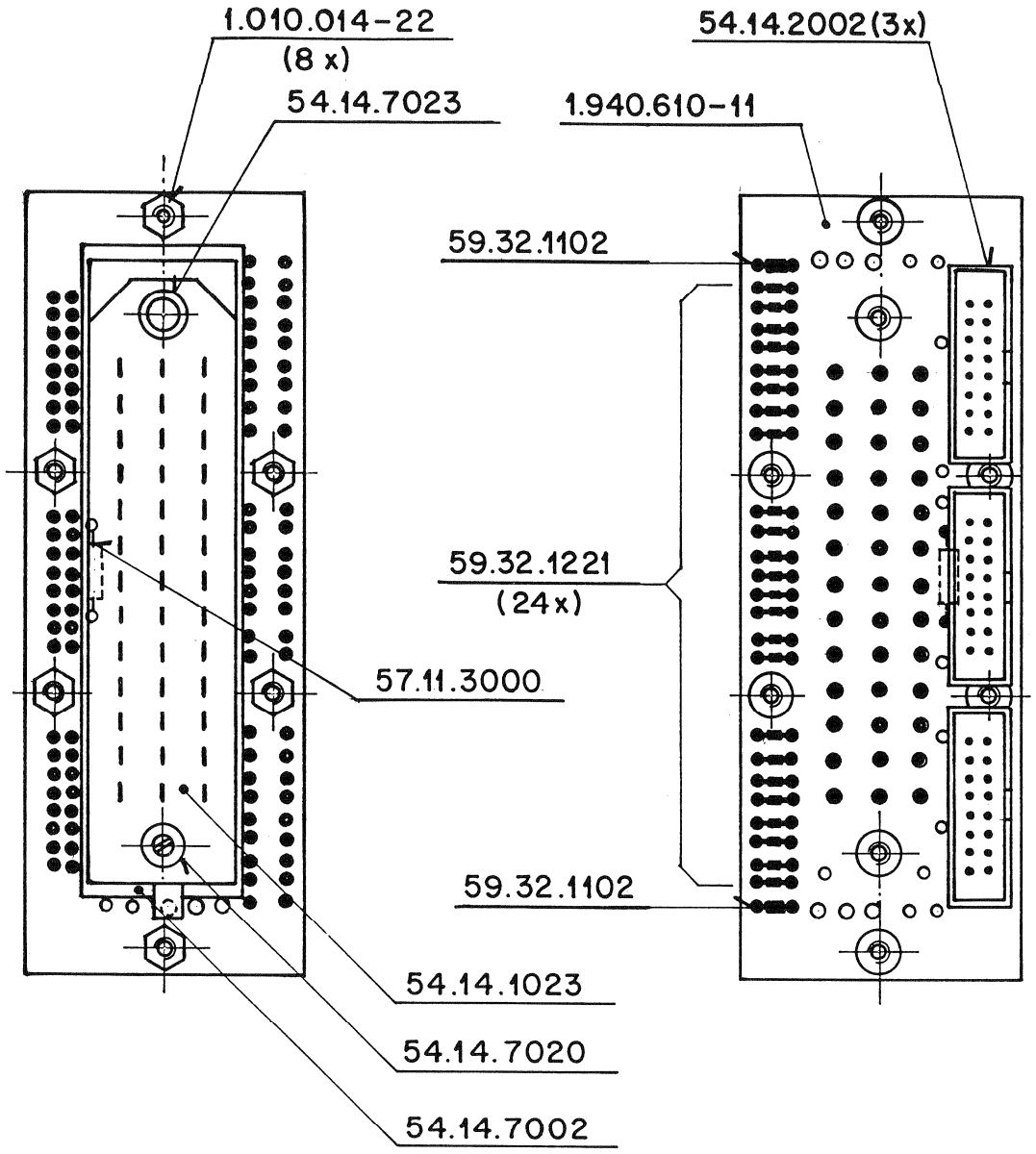

Änderung					
					③
					②
					①
Ausgabe	19.2.97				⓪
	Datum	Gez.	Gepr.	Ges.	Index

Kopie für:

STUDER REGENSDORF ZÜRICH	Benennung: S 39 M CONNECTION UNIT	Nummer: 1.940.610-00

Connection Board BNC AESI-Card 1.940.611.00

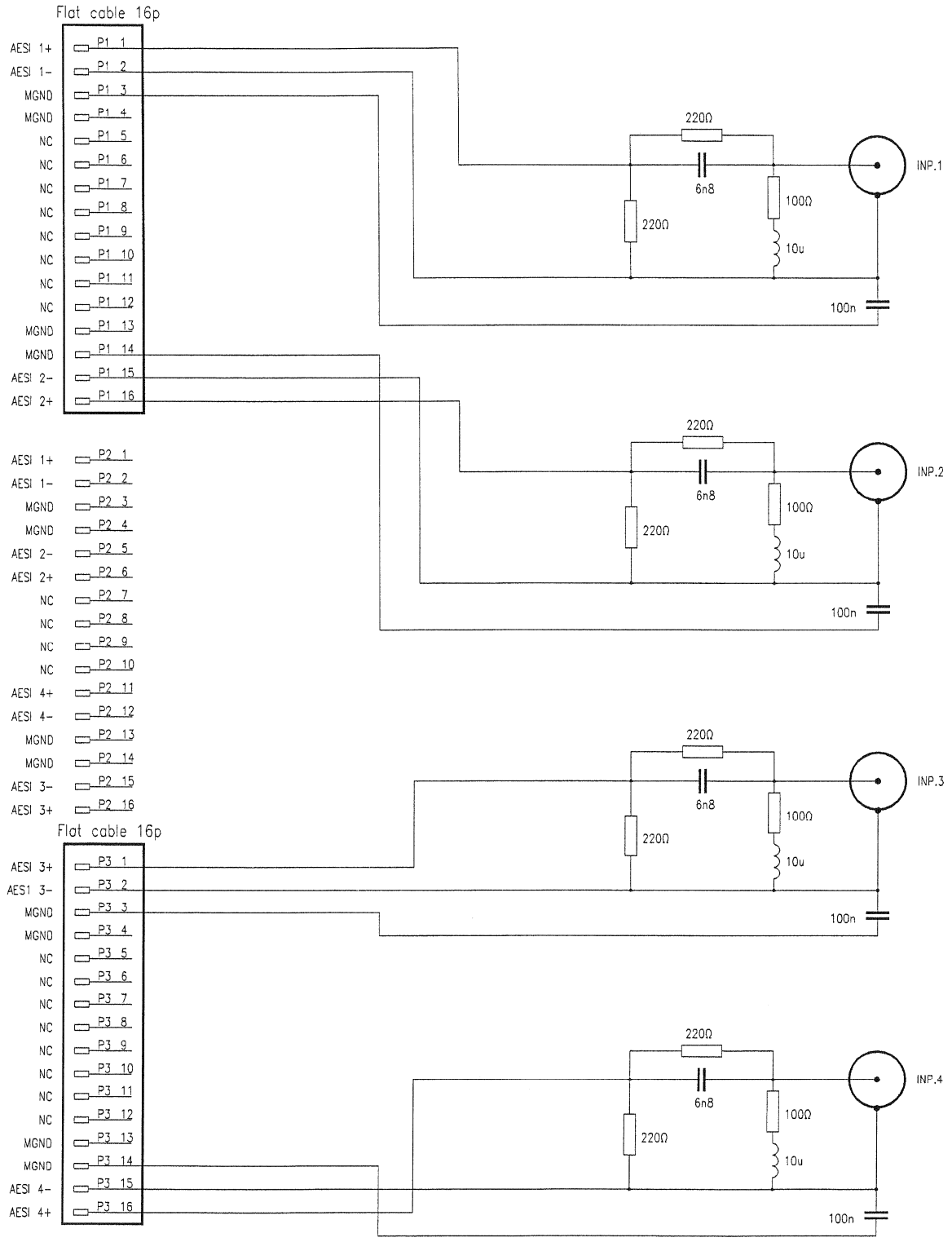

0 31.10.96 zs				
PCB-BNC-AESI				PAGE 1 OF 1
STUDER REGENSDORF SWITZERLAND	CONNECTION BOARD BNC AESI-CARD			1.940.611

Connection Board BNC AESI-Card 1.940.611.00

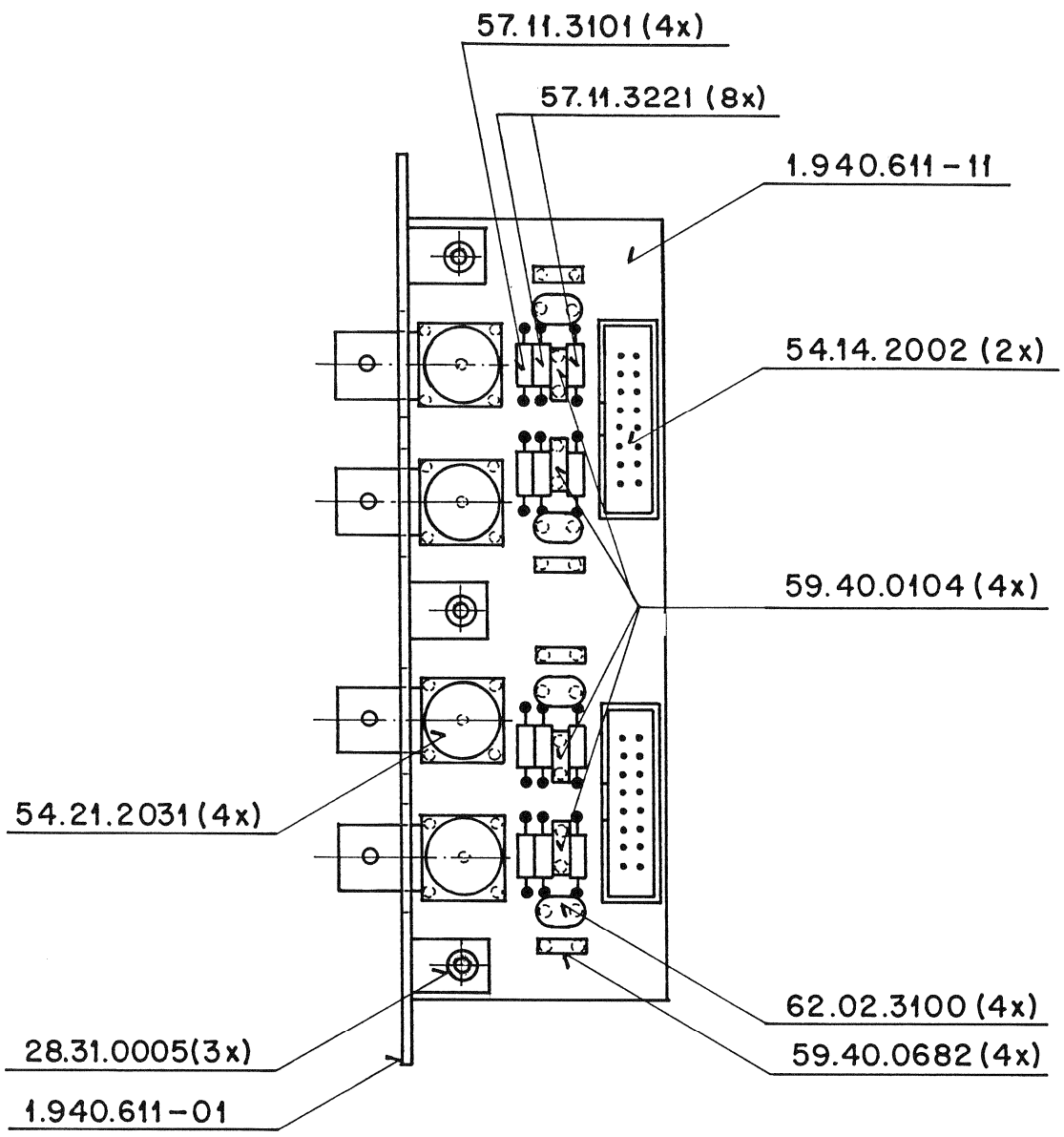

Änderung					
					③
					②
					①
Ausgabe	26.6.97				⓪
	Datum	Gez.	Gepr.	Ges.	Index

Kopie für:

STUDER REGENSDORF ZÜRICH	Benennung: BNC INPUT UNIT	Nummer: 1.940.611-00

Connection Board BNC AESO-Card 1.940.612.00

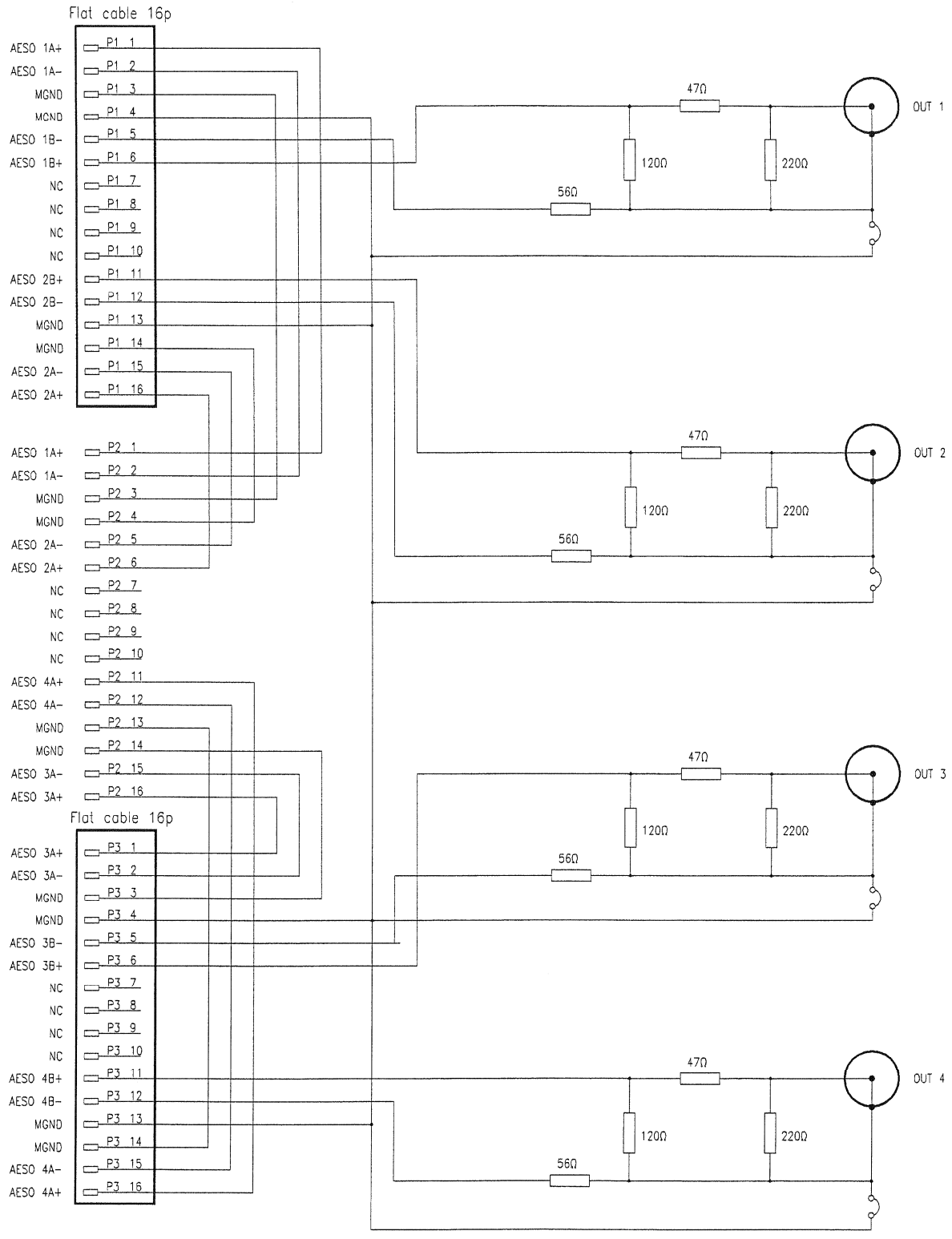

0 31.10.96 zs				
PCB-BNC-AESO				PAGE 1 OF 1
STUDER REGENSDORF SWITZERLAND	CONNECTION BOARD BNC AESO-CARD			1.940.612

Connection Board BNC AESO-Card 1.940.612.00

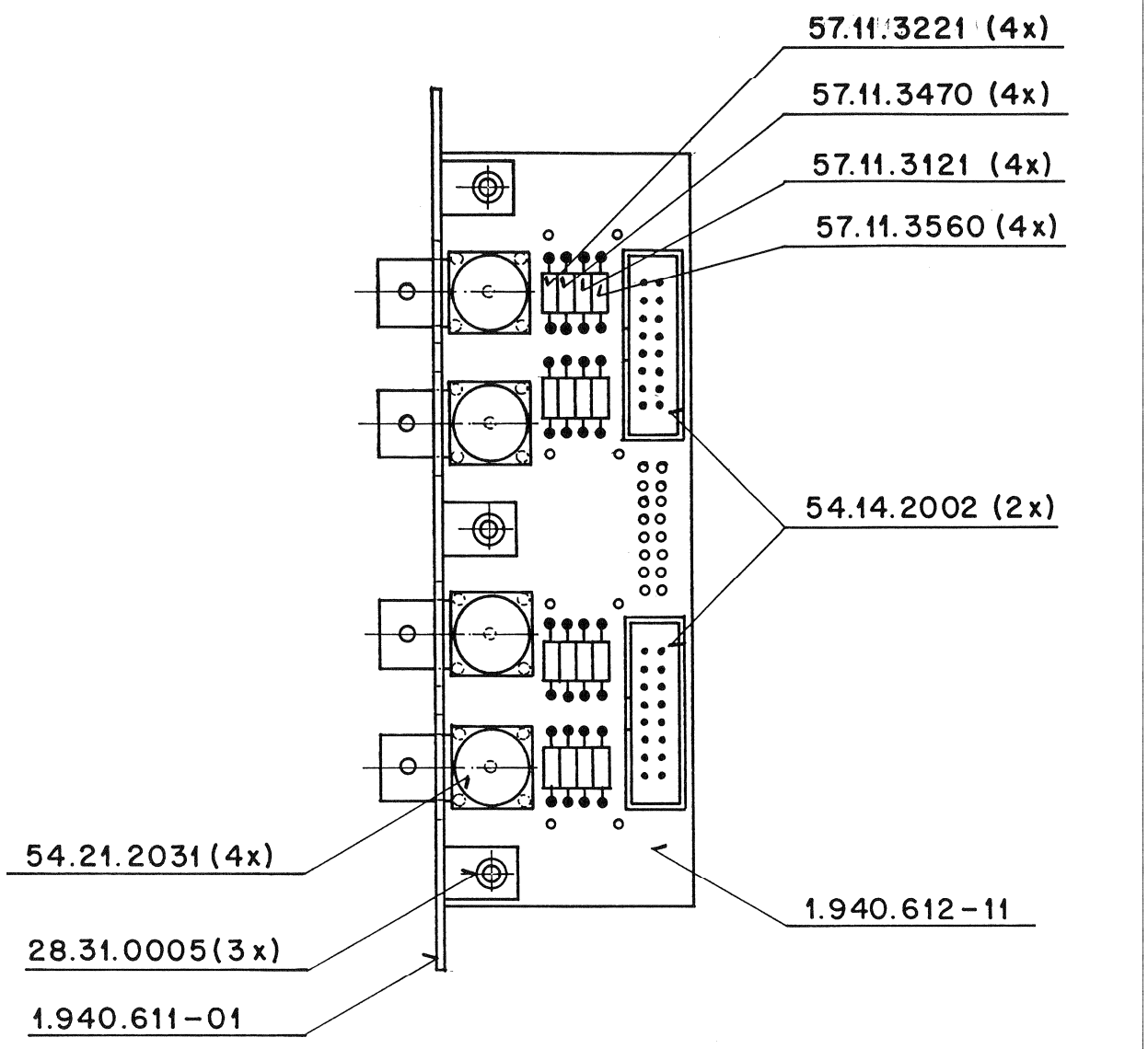

Änderung					
					③
					②
					①
Ausgabe	27.6.97	2	VK		⓪
	Datum	Gez.	Gepr.	Ges.	Index

Kopie für:

STUDER REGENSDORF ZÜRICH	Benennung: BNC OUTPUT UNIT	Nummer: 1.940.612-00

Connection Board S-30F - C4AD 1.940.613.00
Connection Board S-30M - C4AD 1.940.614.00

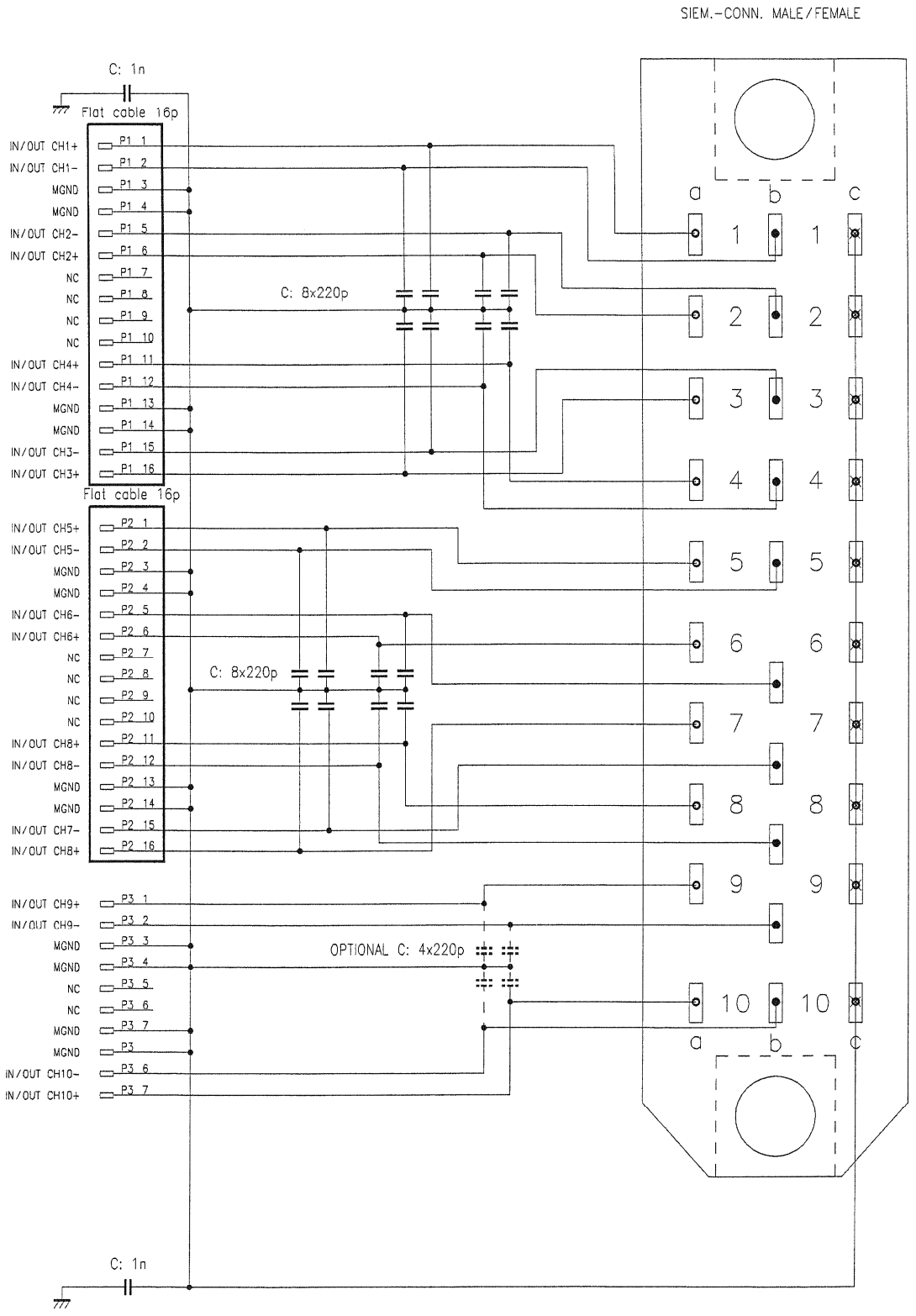

0 16.7.97 GE				
PCB-S30-ANA				PAGE 1 OF 1
STUDER REGENSDORF SWITZERLAND	CONNECTION BOARD S-30F - C4AD CONNECTION BOARD S-30M - C4DA			1.940.613 1.940.614

Connection Board S-30F - C4AD 1.940.613.00

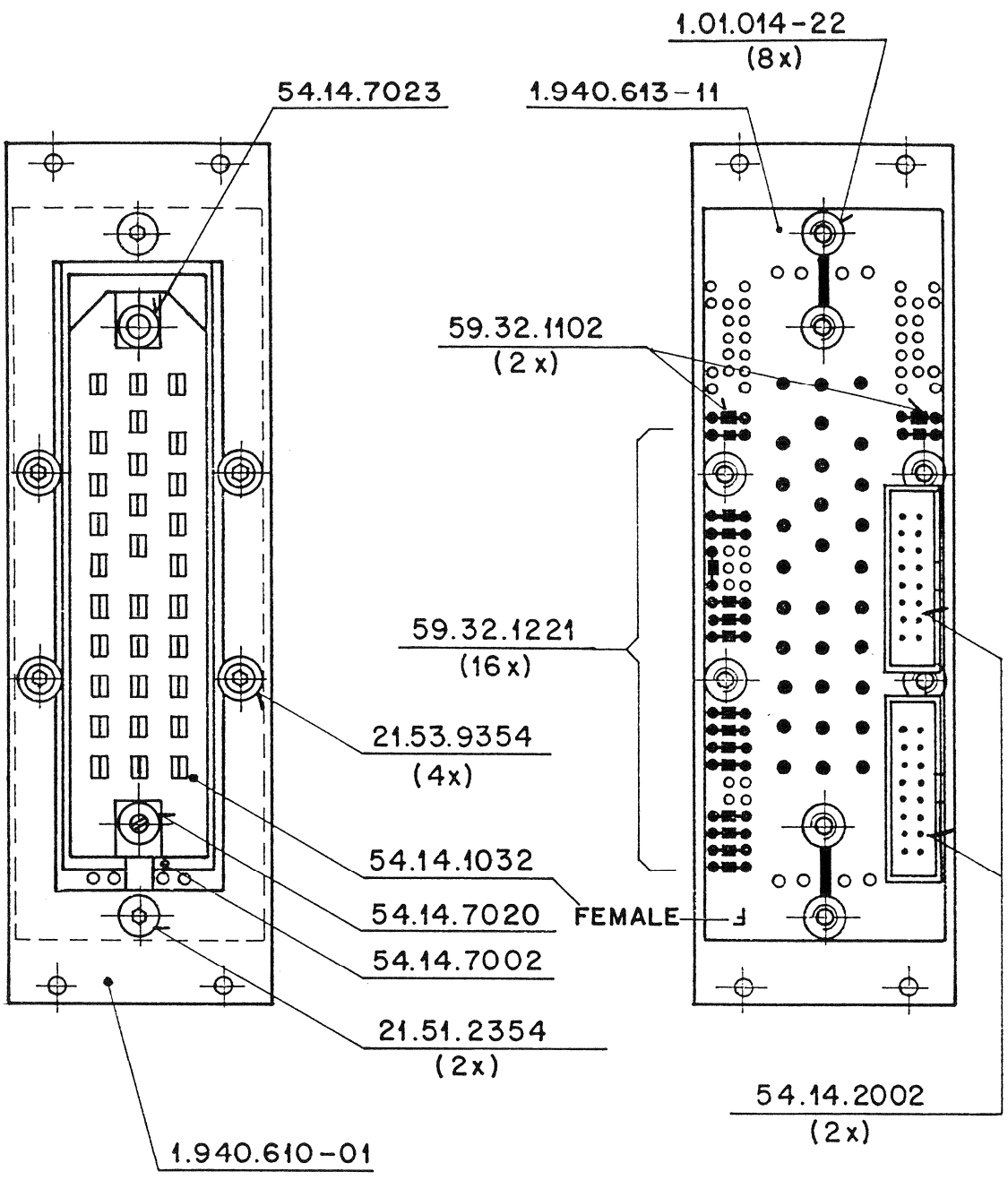

Änderung					
					3
					2
					1
Ausgabe	26.6.97				0
	Datum	Gez.	Gepr.	Ges.	Index

Kopie für:

STUDER REGENSDORF ZÜRICH	Benennung: S 30 F CONNECTION UNIT	Nummer: 1.940.613-00

Connection Board S-30M - C4AD 1.940.614.00

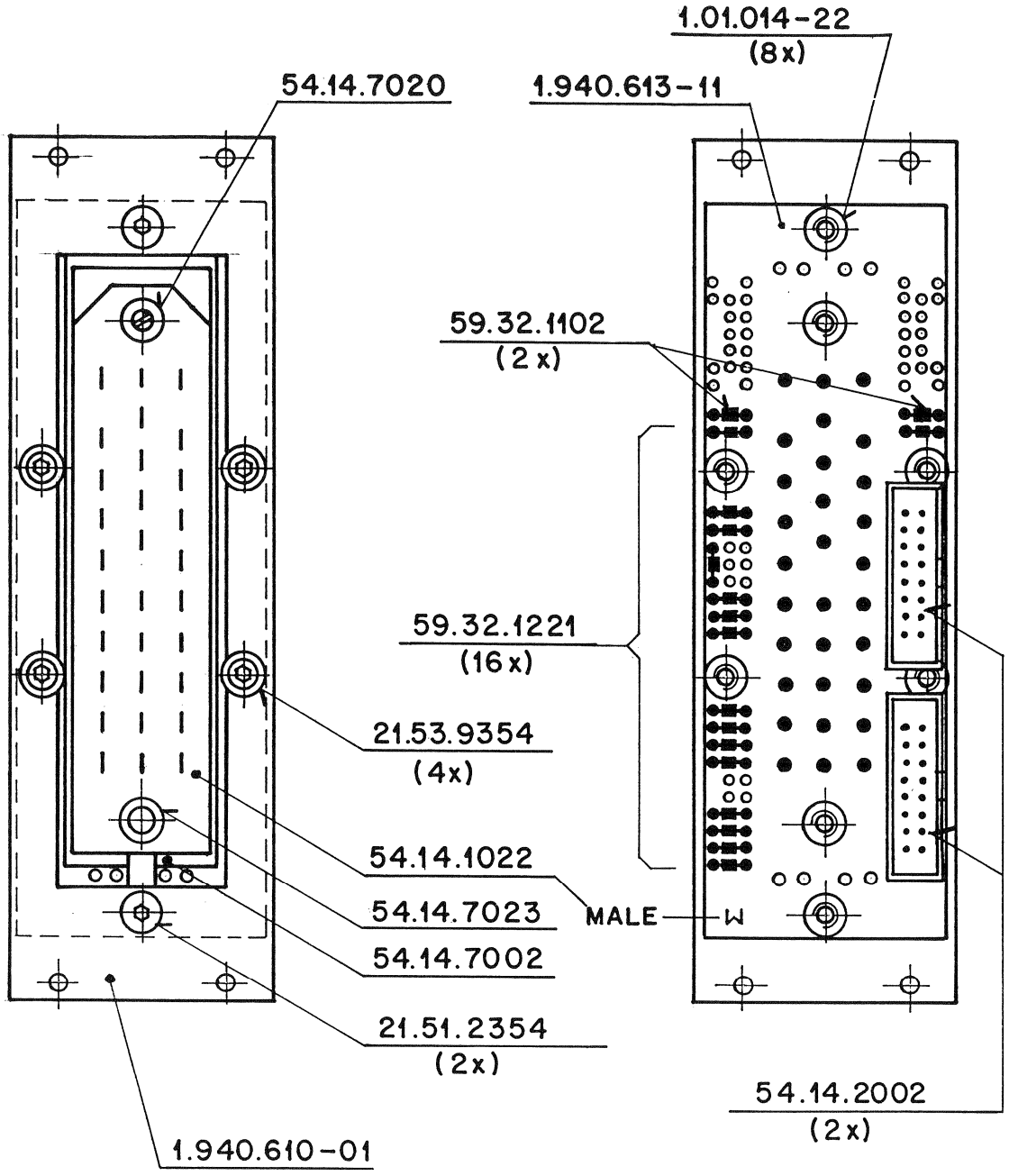

Änderung					
					3
					2
					1
Ausgabe	20.6.97				0
	Datum	Gez.	Gepr.	Ges.	Index

Kopie für:

STUDER REGENSDORF ZÜRICH	Benennung: S 30 M CONNECTION UNIT	Nummer: 1.940.614-00

Connection Board D-15F AESI-Card 1.940.615.00

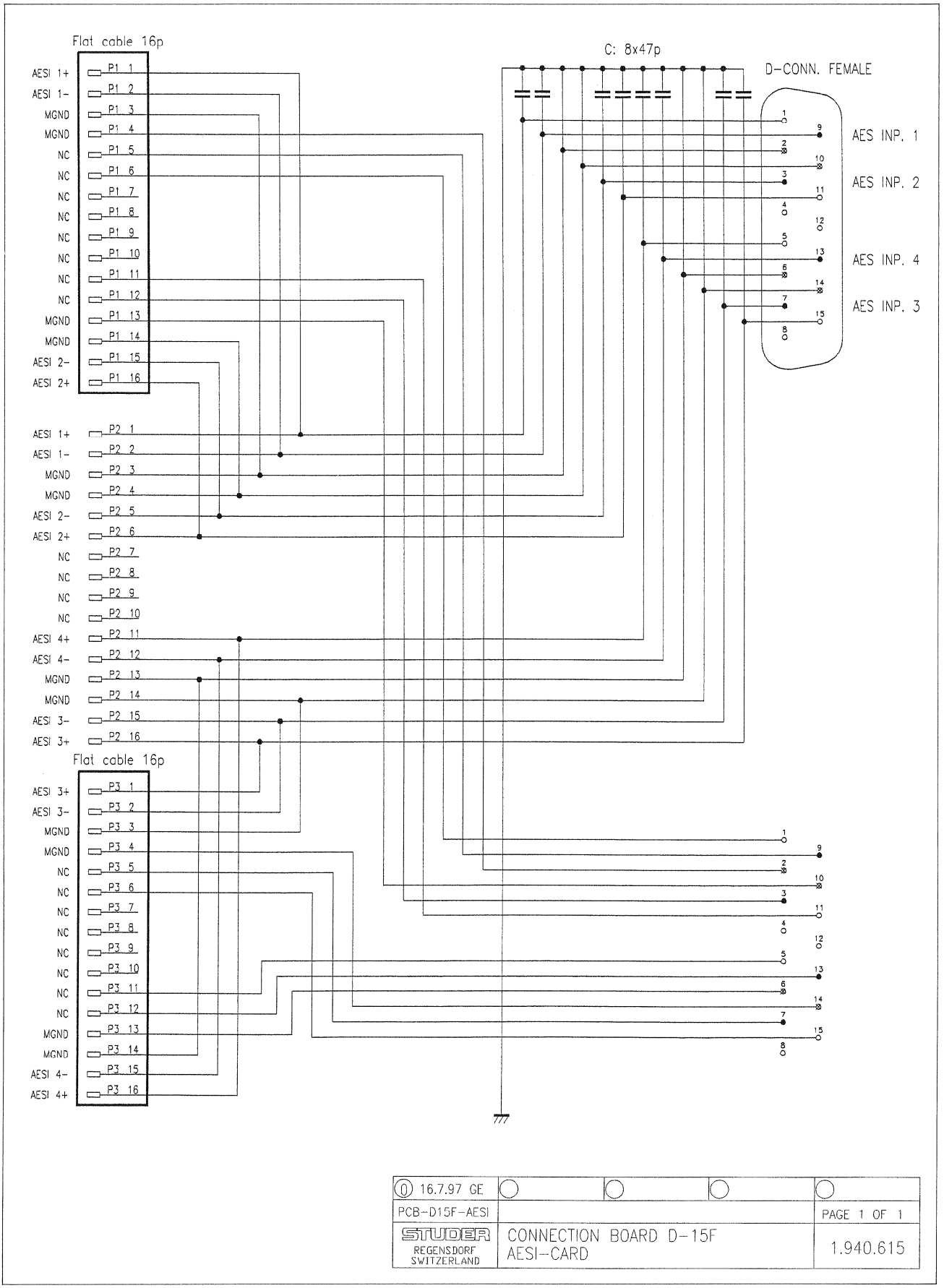

0 16.7.97 GE				
PCB-D15F-AESI				PAGE 1 OF 1
STUDER REGENSDORF SWITZERLAND	CONNECTION BOARD D-15F AESI-CARD			1.940.615

Connection Board D-15F AESI-Card 1.940.615.00

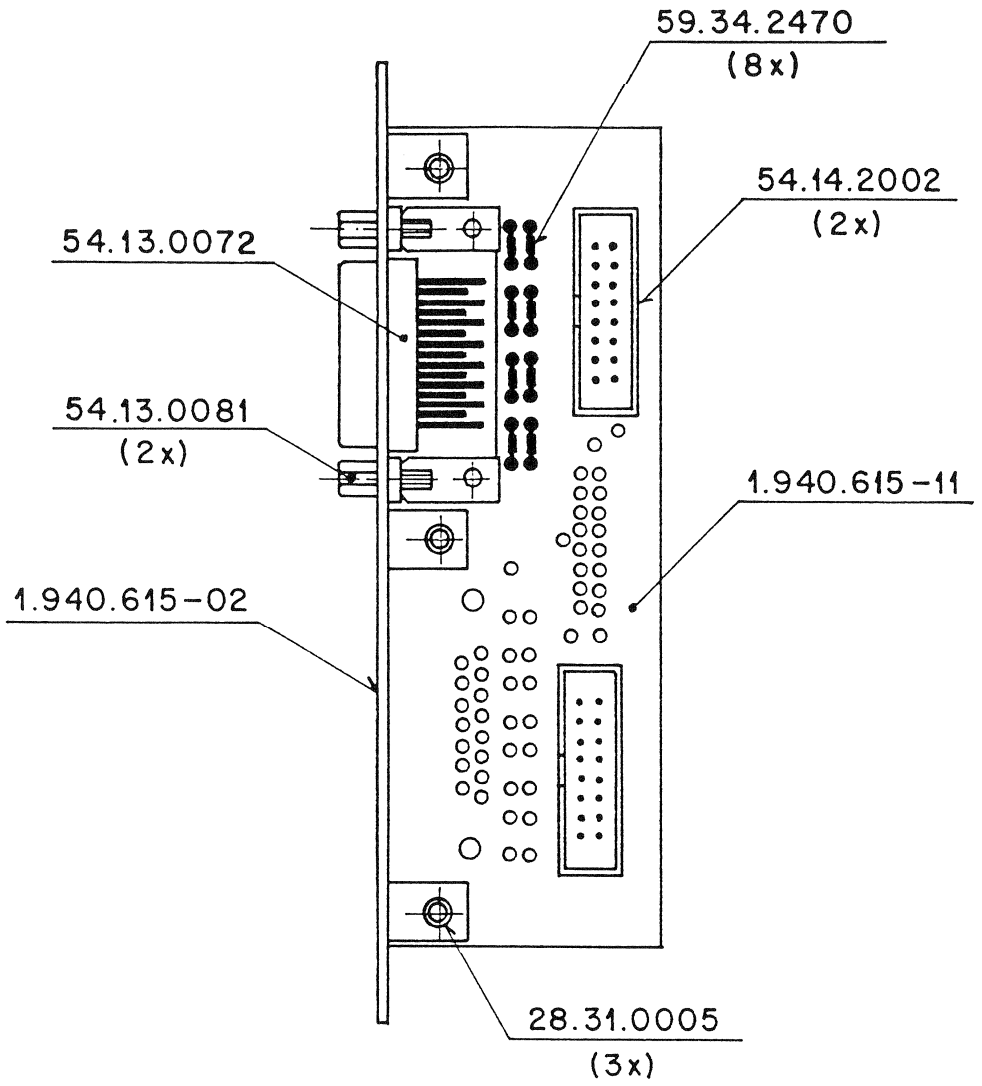

Änderung					
					3
					2
					1
Ausgabe	20.2.97	2	M		0
	Datum	Gez.	Gepr.	Ges.	Index

Kopie für:

STUDER REGENSDORF ZÜRICH	Benennung: D 15 F CONNECTION UNIT	Nummer: 1.940.615-00

Connection Board D-15F C4AD-Card 1.940.615.00

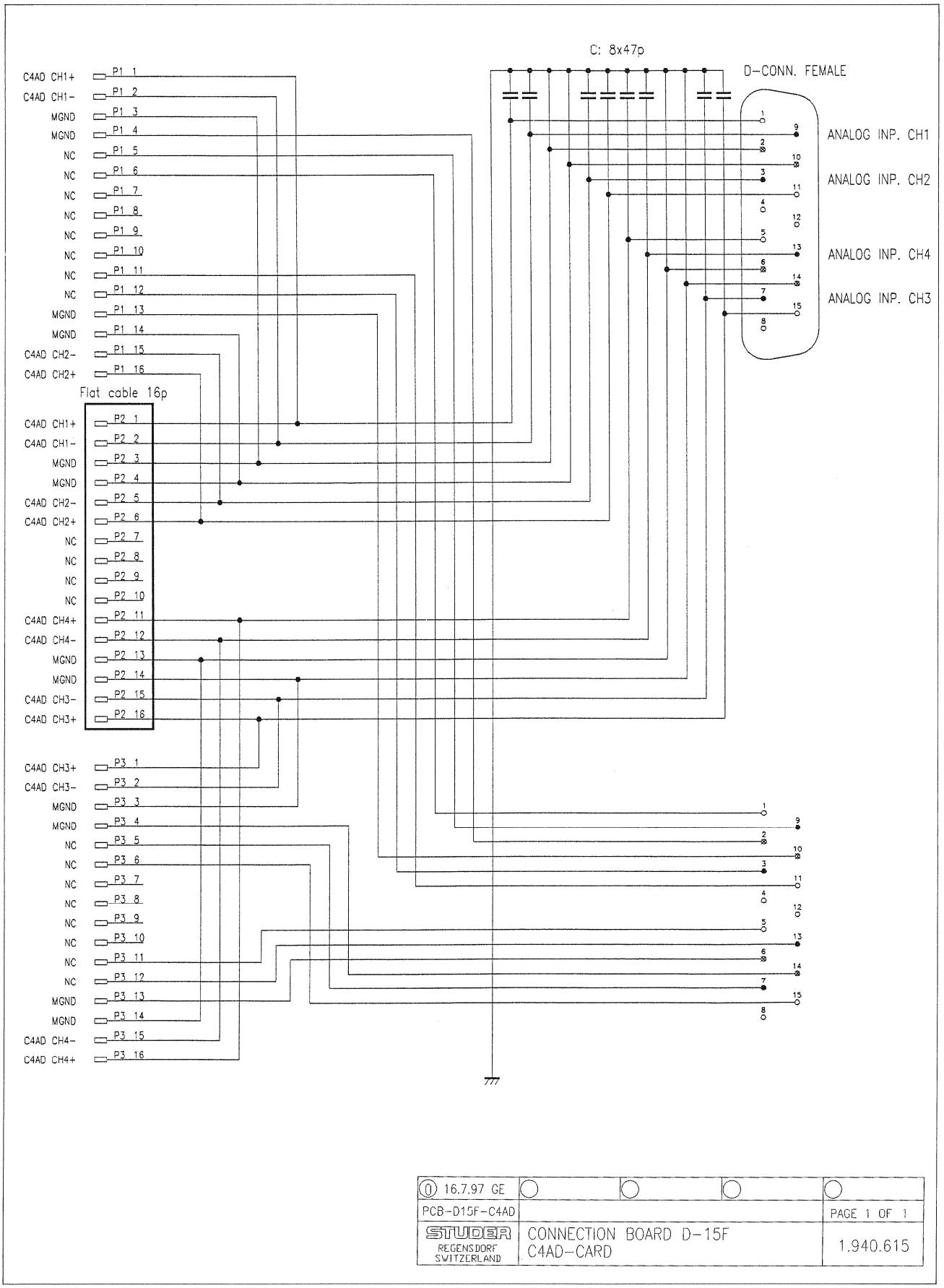

0 16.7.97 GE				
PCB-D15F-C4AD				PAGE 1 OF 1
STUDER REGENSDORF SWITZERLAND	CONNECTION BOARD D-15F C4AD-CARD			1.940.615

Connection Board D-15F C4AD-Card 1.940.615.00

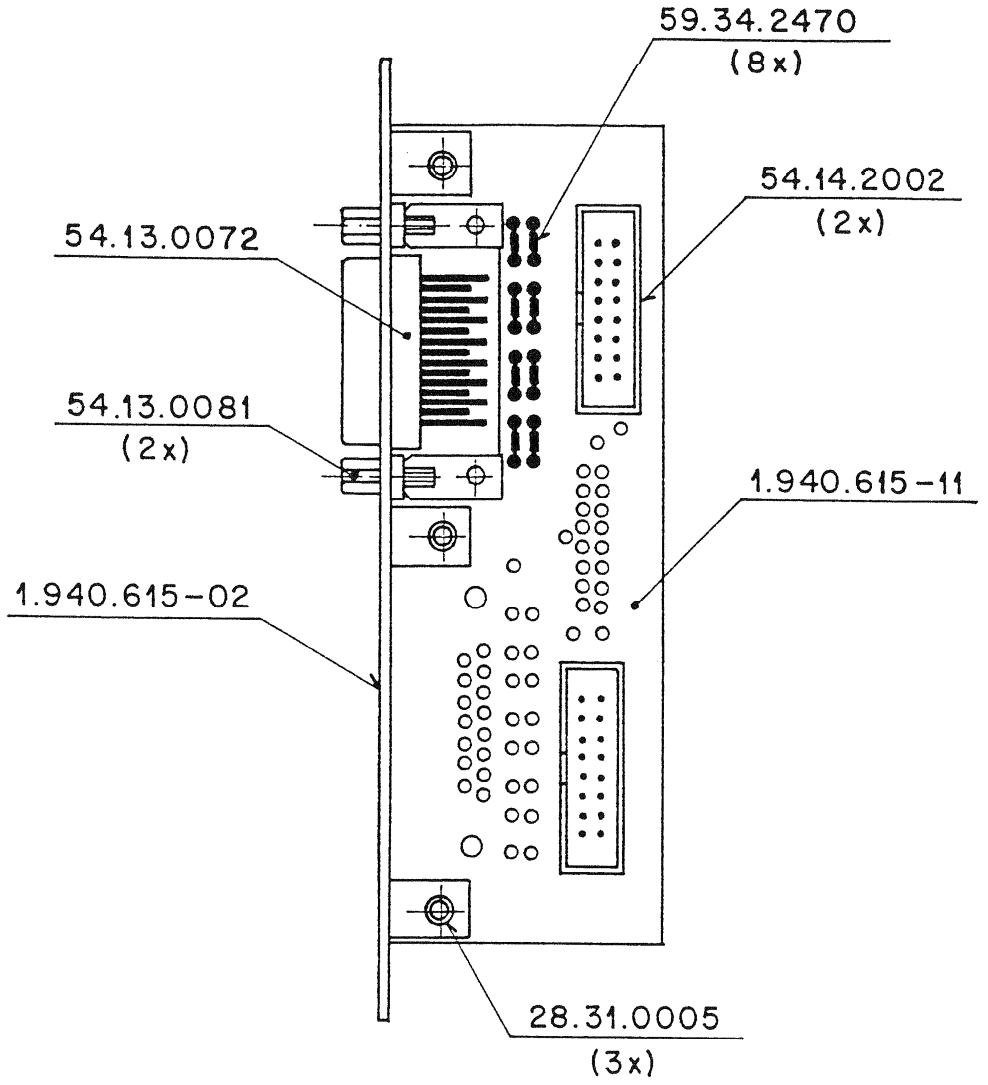

Änderung					
					③
					②
					①
Ausgabe	20.2.97	2			⓪
	Datum	Gez.	Gepr.	Ges.	Index

Kopie für:

STUDER REGENSDORF ZÜRICH	Benennung: D 15 F CONNECTION UNIT	Nummer: 1.940.615 -00

Connection Board D-15M AESO-Card 1.940.616.00

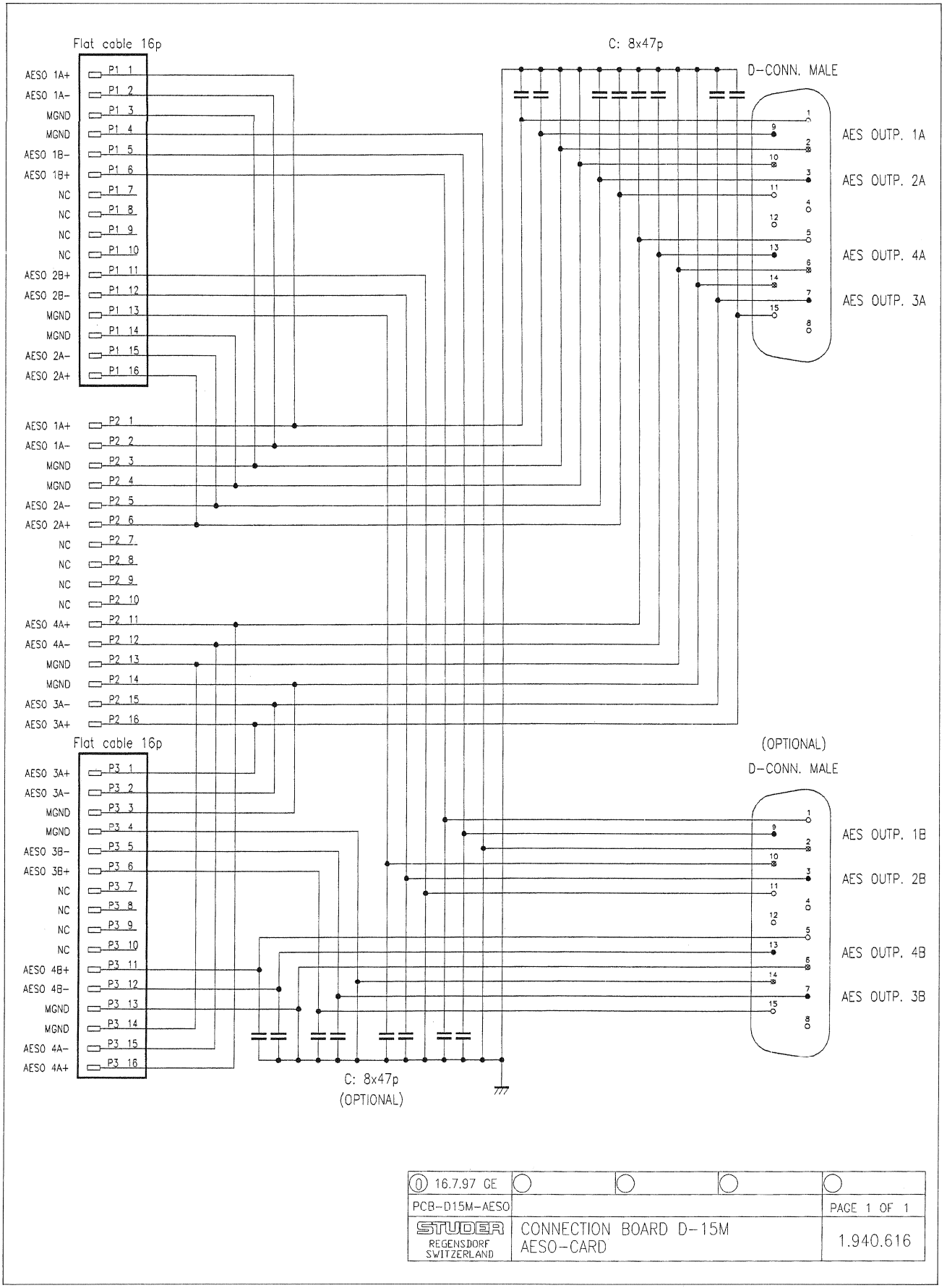

⓪ 16.7.97 GE				
PCB-D15M-AESO				PAGE 1 OF 1
STUDER REGENSDORF SWITZERLAND	CONNECTION BOARD D-15M AESO-CARD			1.940.616

Connection Board D-15M AESO-Card 1.940.616.00

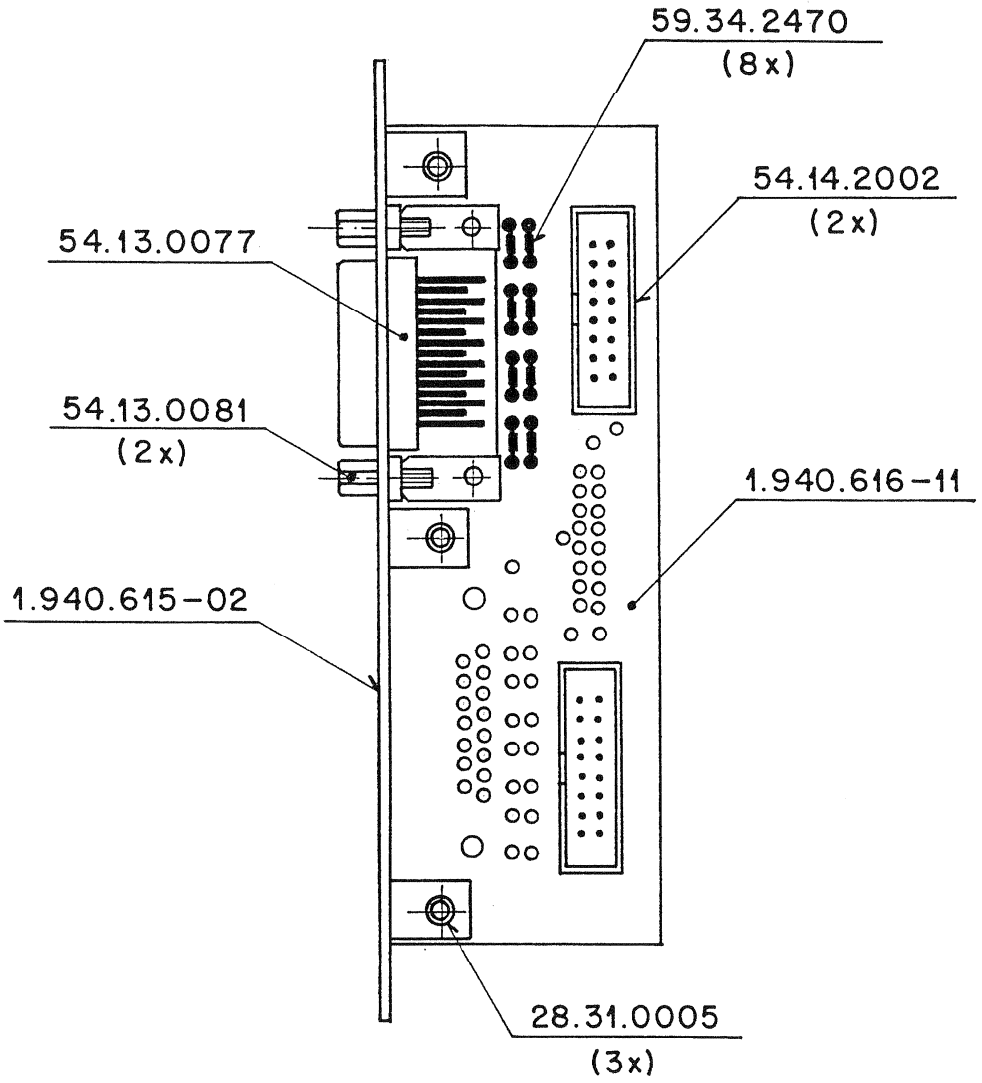

Änderung					
					3
					2
					1
Ausgabe	20.2.97	2	VA		0
	Datum	Gez.	Gepr.	Ges.	Index

Kopie für:

STUDER REGENSDORF ZÜRICH	Benennung: D 15 M CONNECTION UNIT	Nummer: 1.940.616-00

Connection Board D-15M C4DA-Card 1.940.616.00

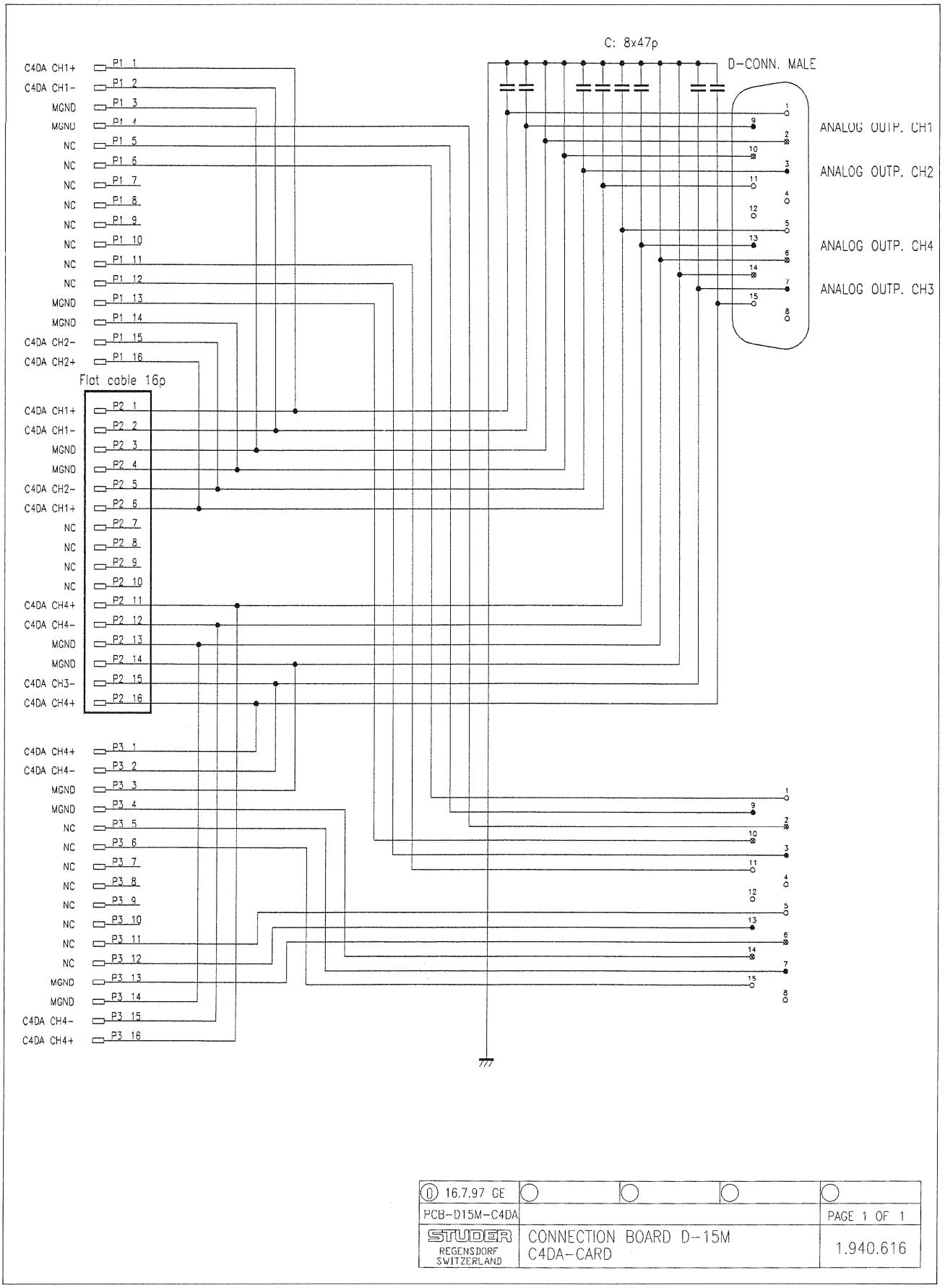

⓪ 16.7.97 GE				
PCB-D15M-C4DA				PAGE 1 OF 1
STUDER REGENSDORF SWITZERLAND	CONNECTION BOARD D-15M C4DA-CARD			1.940.616

Connection Board D-15M C4DA-Card 1.940.616.00

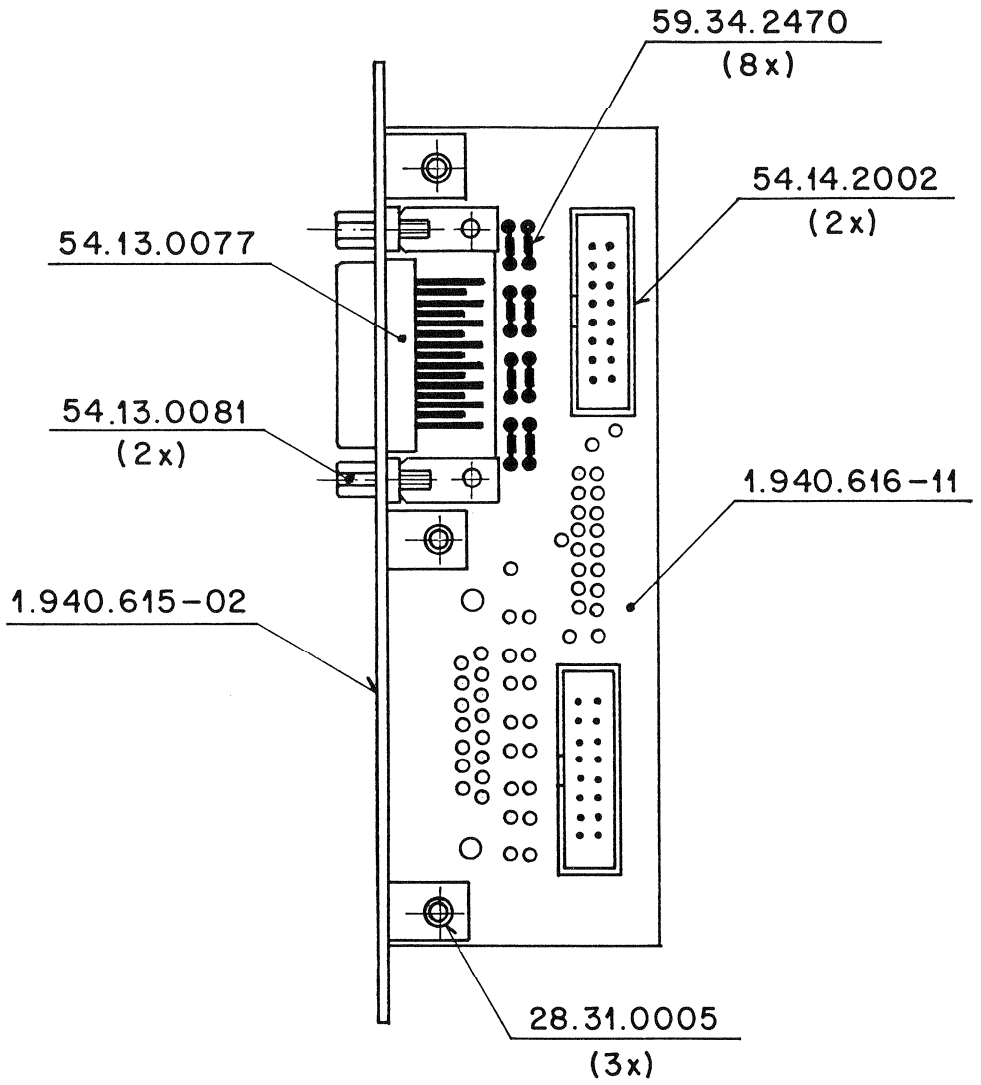

Änderung					
					3
					2
					1
Ausgabe	20.2.97	2	4		0
	Datum	Gez.	Gepr.	Ges.	Index

Kopie für:

STUDER REGENSDORF ZÜRICH	Benennung: D 15 M CONNECTION UNIT	Nummer: 1.940.616-00

XLR Connection AES / EBU Input 1.940.617.81

PCB:	1.940.617.12	(1x)
C 47pF:	59.34.2470	(8x)
Px:	54.14.2002	(2x)
Wxx:	57.11.3000	(4x)
XLR 3P/F.	54.21.2207	(4x)
FRONT	1.940.617.01	(1x)
SCREWS:	20.24.7623	(8x)

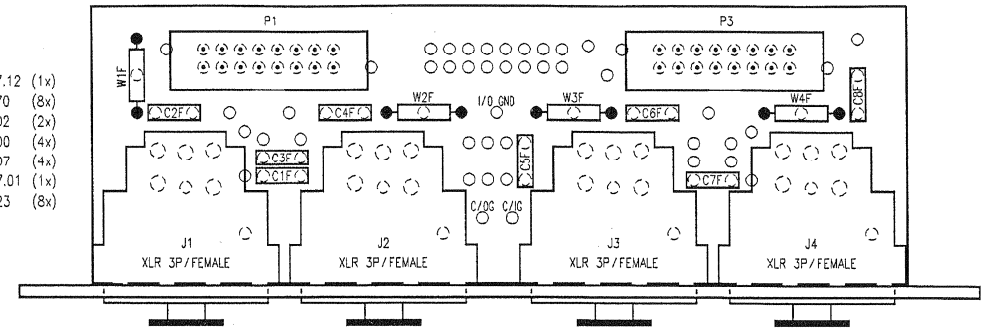

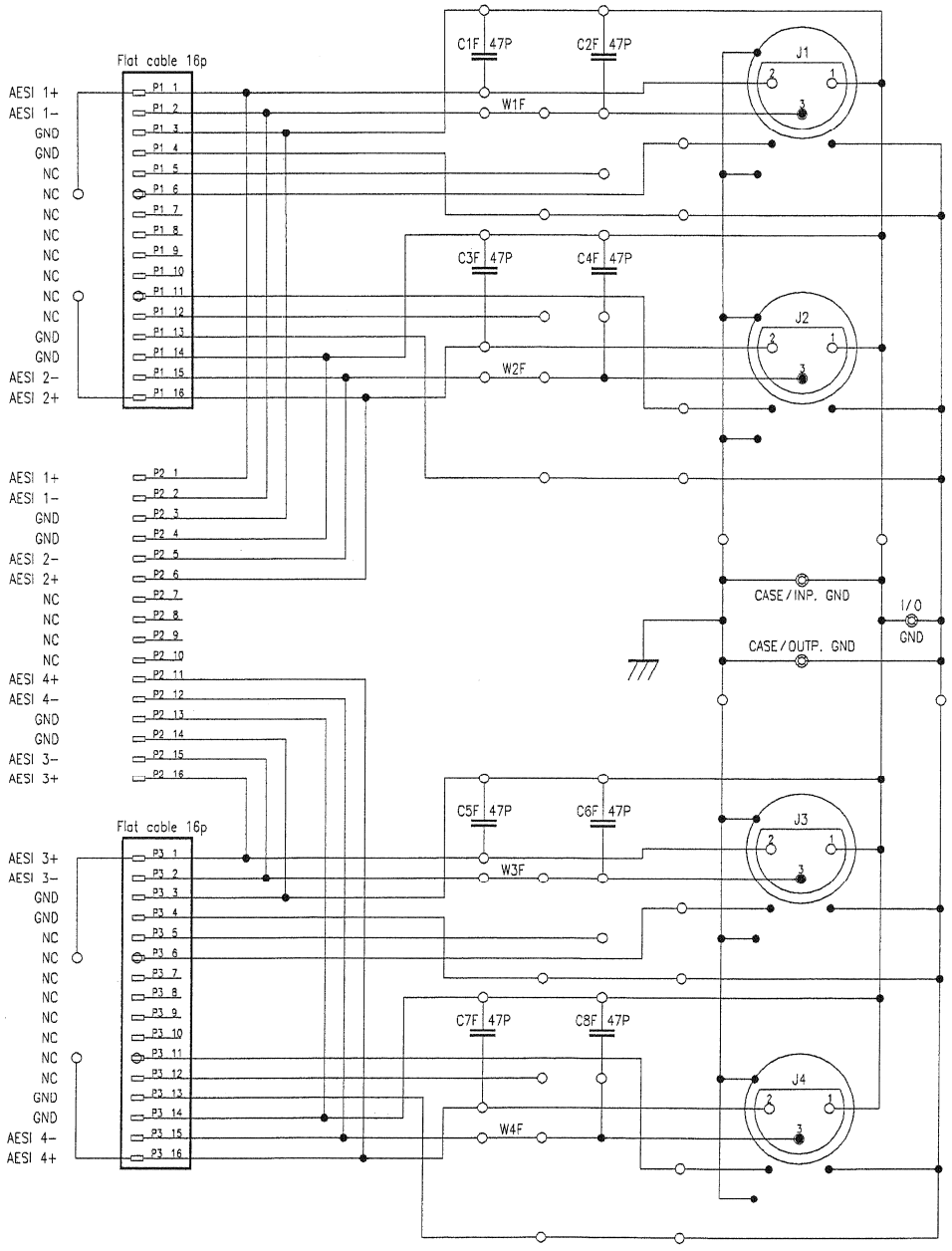

0 05.01.98/RK		
SC1940617-81		PAGE 1 OF 1
STUDER REGENSDORF SWITZERLAND	XLR CONNECTION AES/EBU INPUT	1.940.617.81

XLR Connection AES / EBU Output 1.940.618.81

PCB:	1.940.617.12	(1x)
C 47pF:	59.34.2470	(8x)
Px:	54.14.2002	(2x)
Wxx:	57.11.3000	(4x)
XLR 3P/M:	54.21.2202	(4x)
FRONT	1.940.617.01	(1x)
SCREWS:	20.24.7623	(8x)

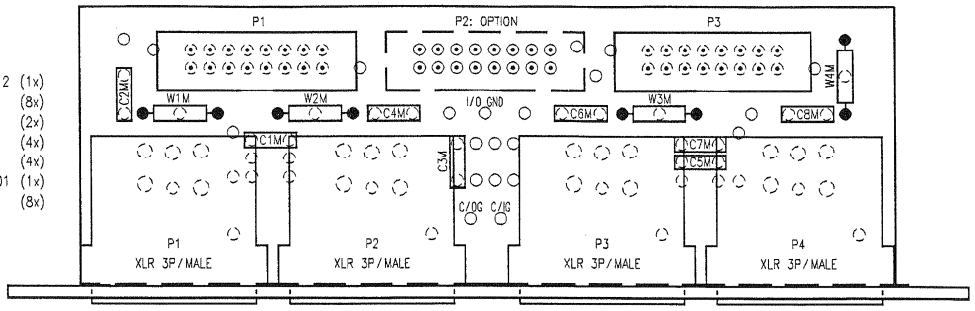

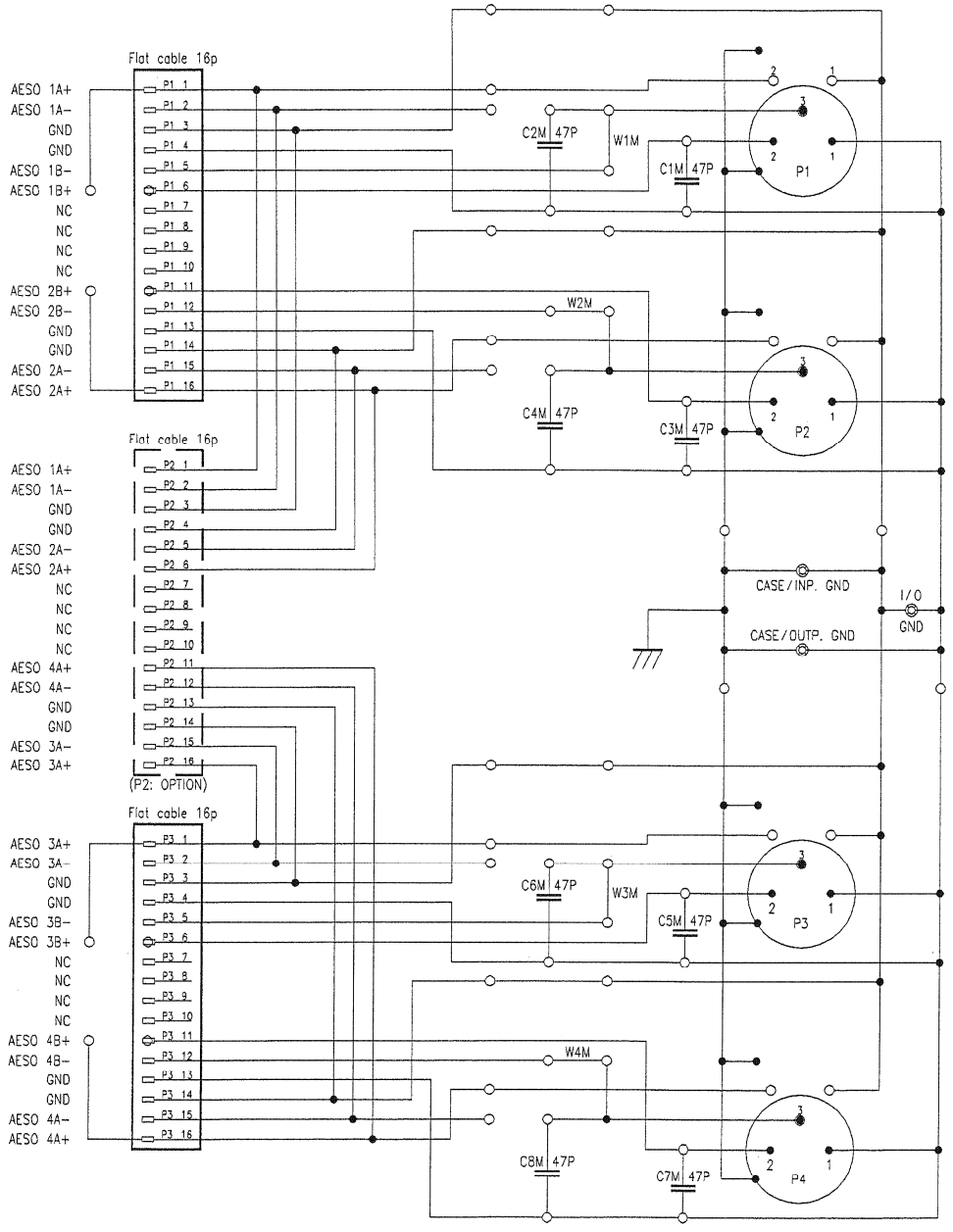

0 05.01.98/BK		
SC1940618-81		PAGE 1 OF 1
STUDER REGENSDORF SWITZERLAND	XLR CONNECTION AES/EBU OUTPUT	1.940.618.81

D25+D25 Connection Unit 1.940.619.00

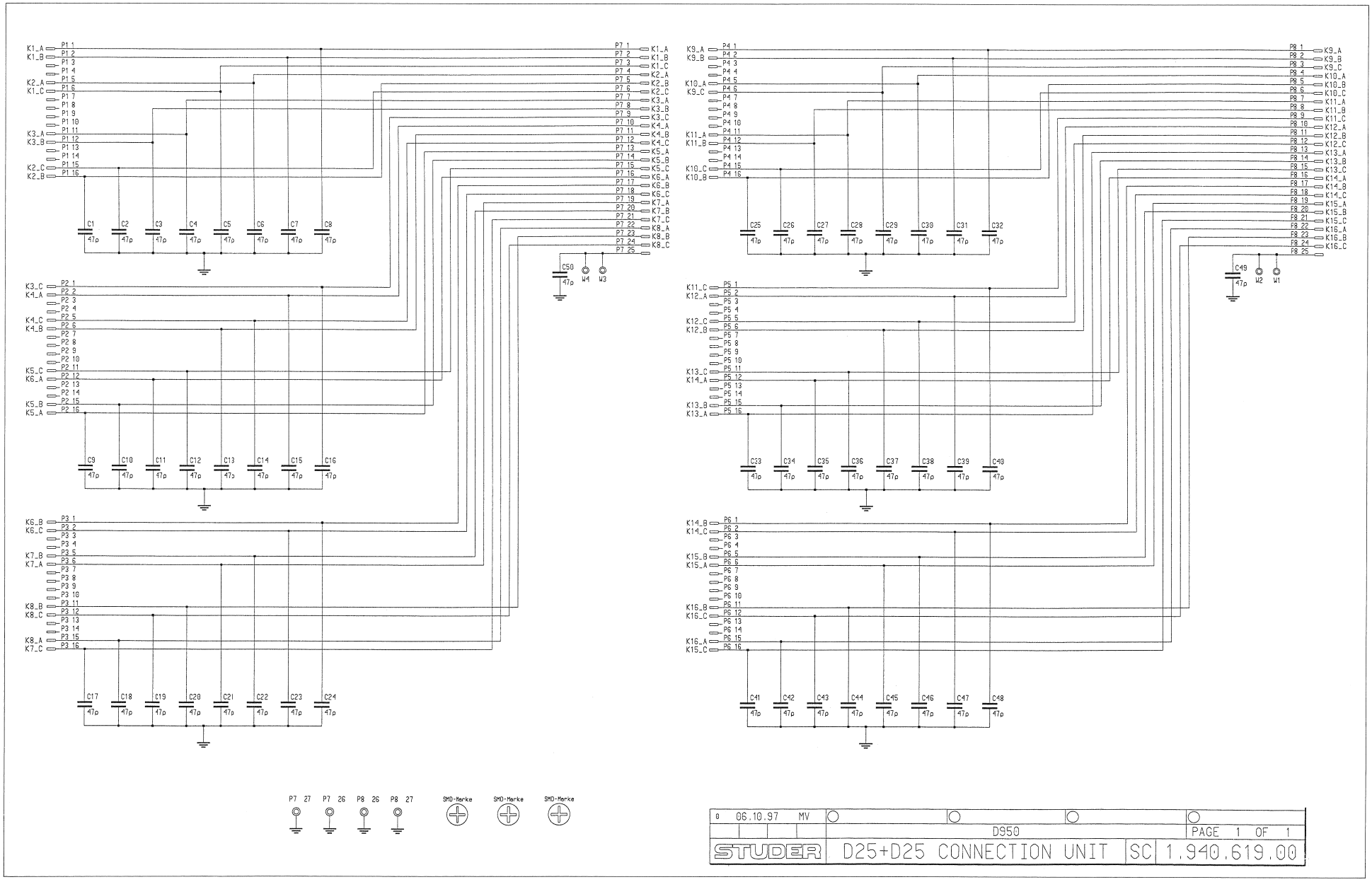

D25+D25 Connection Unit 1.940.619.00

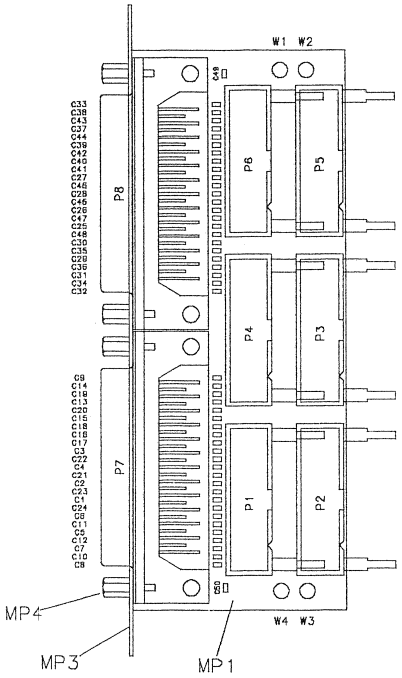

Idx.	Pos.	Part No.	Qty.	Type/Val.	Description
0	C 1	59.60.2241		47p	CER 50V, 5%, C0G, 0603
0	C 2	59.60.2241		47p	CER 50V, 5%, C0G, 0603
0	C 3	59.60.2241		47p	CER 50V, 5%, C0G, 0603
0	C 4	59.60.2241		47p	CER 50V, 5%, C0G, 0603
0	C 5	59.60.2241		47p	CER 50V, 5%, C0G, 0603
0	C 6	59.60.2241		47p	CER 50V, 5%, C0G, 0603
0	C 7	59.60.2241		47p	CER 50V, 5%, C0G, 0603
0	C 8	59.60.2241		47p	CER 50V, 5%, C0G, 0603
0	C 9	59.60.2241		47p	CER 50V, 5%, C0G, 0603
0	C 10	59.60.2241		47p	CER 50V, 5%, C0G, 0603
0	C 11	59.60.2241		47p	CER 50V, 5%, C0G, 0603
0	C 12	59.60.2241		47p	CER 50V, 5%, C0G, 0603
0	C 13	59.60.2241		47p	CER 50V, 5%, C0G, 0603
0	C 14	59.60.2241		47p	CER 50V, 5%, C0G, 0603
0	C 15	59.60.2241		47p	CER 50V, 5%, C0G, 0603
0	C 16	59.60.2241		47p	CER 50V, 5%, C0G, 0603
0	C 17	59.60.2241		47p	CER 50V, 5%, C0G, 0603
0	C 18	59.60.2241		47p	CER 50V, 5%, C0G, 0603
0	C 19	59.60.2241		47p	CER 50V, 5%, C0G, 0603
0	C 20	59.60.2241		47p	CER 50V, 5%, C0G, 0603
0	C 21	59.60.2241		47p	CER 50V, 5%, C0G, 0603
0	C 22	59.60.2241		47p	CER 50V, 5%, C0G, 0603
0	C 23	59.60.2241		47p	CER 50V, 5%, C0G, 0603
0	C 24	59.60.2241		47p	CER 50V, 5%, C0G, 0603
0	C 25	59.60.2241		47p	CER 50V, 5%, C0G, 0603
0	C 26	59.60.2241		47p	CER 50V, 5%, C0G, 0603
0	C 27	59.60.2241		47p	CER 50V, 5%, C0G, 0603
0	C 28	59.60.2241		47p	CER 50V, 5%, C0G, 0603
0	C 29	59.60.2241		47p	CER 50V, 5%, C0G, 0603
0	C 30	59.60.2241		47p	CER 50V, 5%, C0G, 0603
0	C 31	59.60.2241		47p	CER 50V, 5%, C0G, 0603
0	C 32	59.60.2241		47p	CER 50V, 5%, C0G, 0603
0	C 33	59.60.2241		47p	CER 50V, 5%, C0G, 0603
0	C 34	59.60.2241		47p	CER 50V, 5%, C0G, 0603
0	C 35	59.60.2241		47p	CER 50V, 5%, C0G, 0603
0	C 36	59.60.2241		47p	CER 50V, 5%, C0G, 0603
0	C 37	59.60.2241		47p	CER 50V, 5%, C0G, 0603
0	C 38	59.60.2241		47p	CER 50V, 5%, C0G, 0603
0	C 39	59.60.2241		47p	CER 50V, 5%, C0G, 0603
0	C 40	59.60.2241		47p	CER 50V, 5%, C0G, 0603
0	C 41	59.60.2241		47p	CER 50V, 5%, C0G, 0603
0	C 42	59.60.2241		47p	CER 50V, 5%, C0G, 0603
0	C 43	59.60.2241		47p	CER 50V, 5%, C0G, 0603
0	C 44	59.60.2241		47p	CER 50V, 5%, C0G, 0603
0	C 45	59.60.2241		47p	CER 50V, 5%, C0G, 0603
0	C 46	59.60.2241		47p	CER 50V, 5%, C0G, 0603
0	C 47	59.60.2241		47p	CER 50V, 5%, C0G, 0603
0	C 48	59.60.2241		47p	CER 50V, 5%, C0G, 0603
0	C 49	59.60.2241		47p	CER 50V, 5%, C0G, 0603
0	C 50	59.60.2241		47p	CER 50V, 5%, C0G, 0603
0	MP 1	1.940.619.11	1 pce		D25+D25 Connection PCB
0	MP 2	1.940.619.04	1 pce		Nr.-Etikette 5 * 20
0	MP 3	1.940.619.01	1 pce		Rückwand D25+D25
0	MP 4	54.13.0081	4 pcs	4.85mm	Bolzen UNC 4-40
0	P 1	54.14.2102		16p	P STECKER 16 P,AU,VR,GERADE
0	P 2	54.14.2102		16p	P STECKER 16 P,AU,VR,GERADE
0	P 3	54.14.2102		16p	P STECKER 16 P,AU,VR,GERADE
0	P 4	54.14.2102		16p	P STECKER 16 P,AU,VR,GERADE
0	P 5	54.14.2102		16p	P STECKER 16 P,AU,VR,GERADE
0	P 6	54.14.2102		16p	P STECKER 16 P,AU,VR,GERADE
0	P 7	54.13.0073		25p	D-Sub, PCB, Winkel
0	P 8	54.13.0073		25p	D-Sub, PCB, Winkel

End of List

Comments

Edition Ausgabe	Modification Änderung				
	.	.			3
	.	.			2
	.	.			1
10.10.97	AF				0
Date Datum		Visa Dat.	Check Dépr.	Seen Ges.	Index

Copy to: Kopie für: .

STUDER REGENSDORF | Description Benennung: D25+D25 CONNECTION UNIT | Number Nummer: 1.940.619.00

XLR Connection Analog Input 1.940.627.81

PCB:	1.940.617.12	(1x)
C 1nF:	59.32.1102	(1x)
C 220pF:	59.32.1221	(8x)
Px:	54.14.2002	(1x)
Wxx:	57.11.3000	(4x)
XLR 3P/F:	54.21.2207	(4x)
FRONT	1.940.617.01	(1x)
SCREWS:	20.24.7623	(8x)

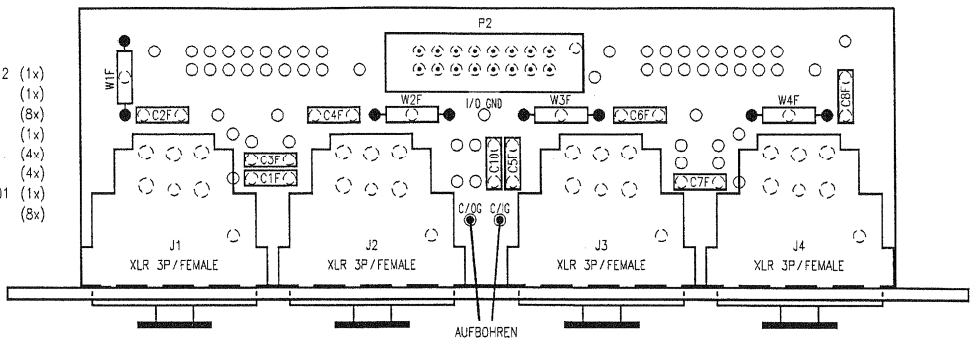

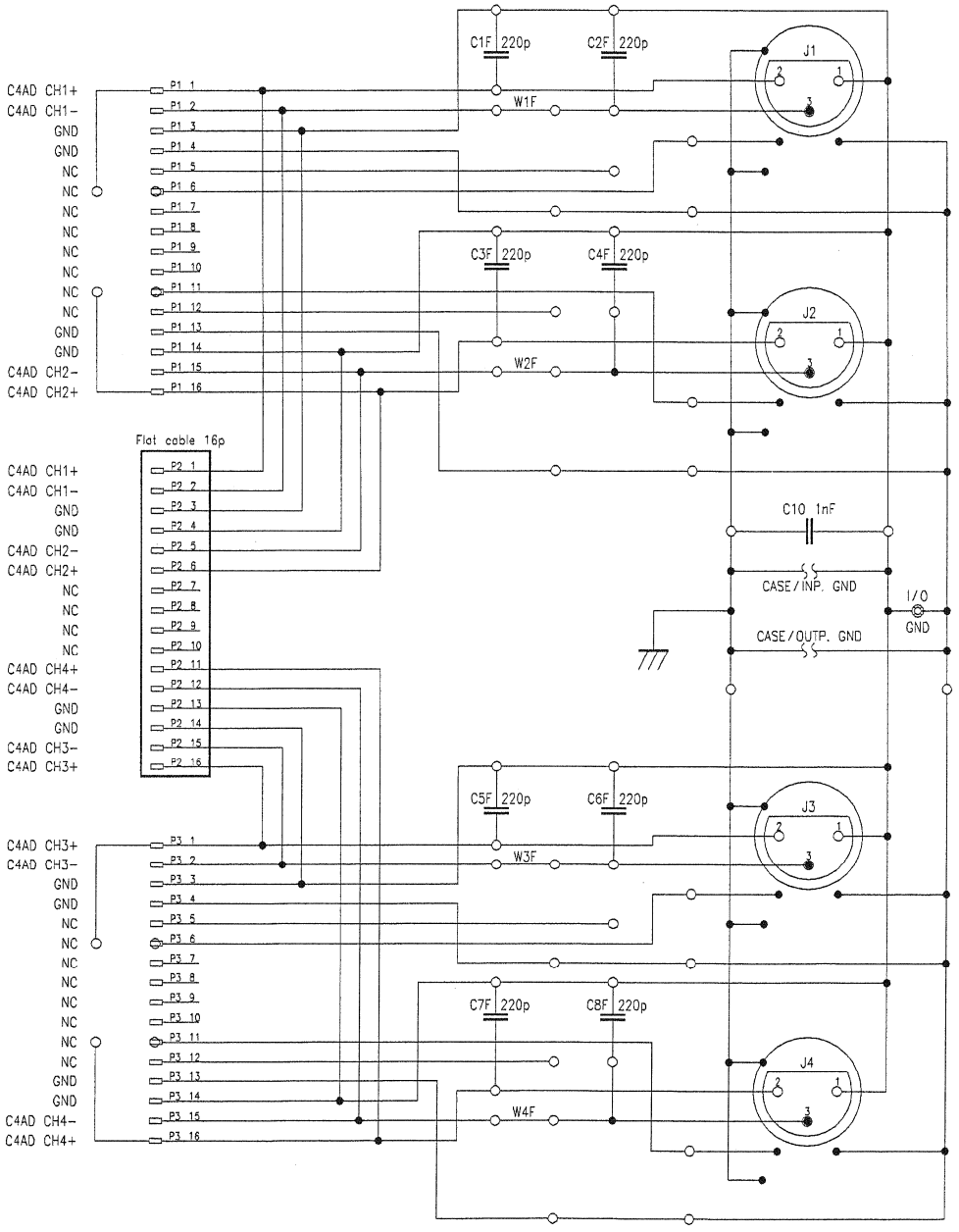

0 05.01.98/BK		
SC1940627-81		PAGE 1 OF 1
STUDER REGENSDORF SWITZERLAND	XLR CONNECTION ANALOG INPUT	1.940.627.81

XLR Connection Analog Output 1.940.628.81

PCB:	1.940.617.12	(1x)
C 1nF:	59.32.1102	(1x)
C 220pF:	59.32.1221	(8x)
Px:	54.14.2002	(1x)
Wxx:	57.11.3000	(8x)
XLR 3P/M:	54.21.2202	(4x)
FRONT	1.940.617.01	(1x)
SCREWS:	20.24.7623	(8x)

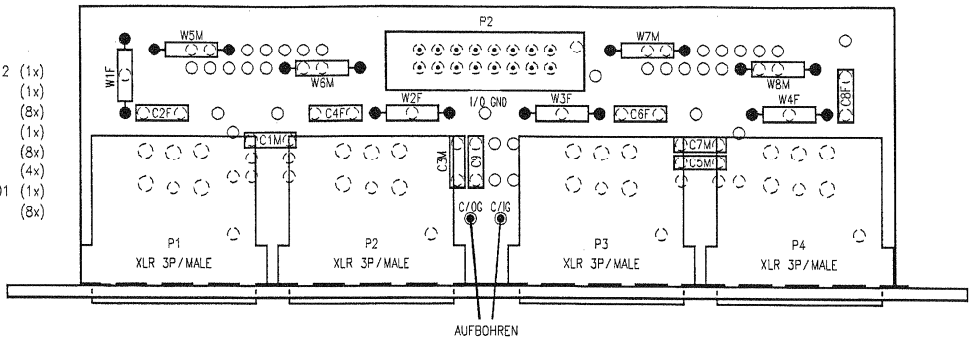

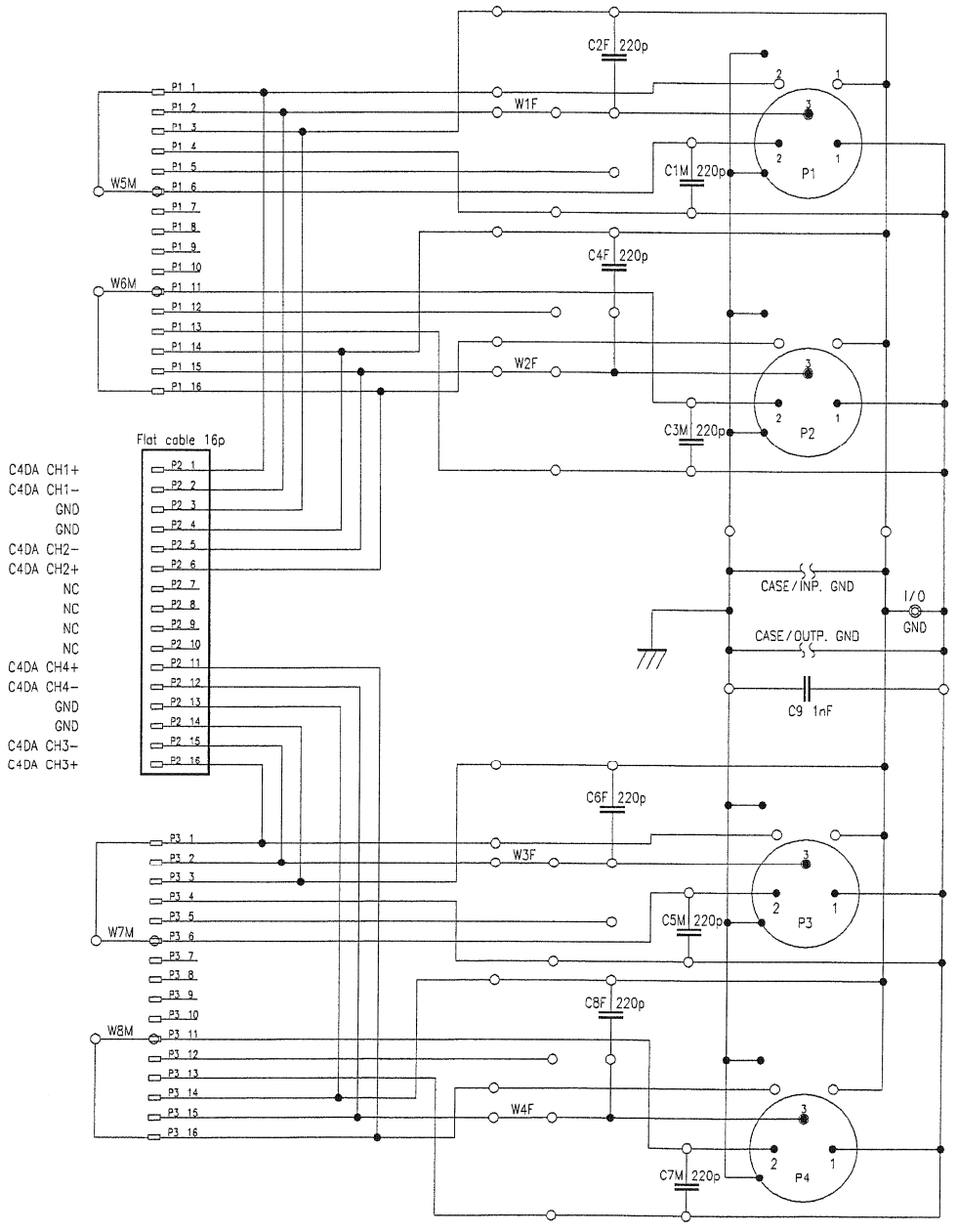

0 05.01.98/BK				
SC1940628-81				PAGE 1 OF 1
STUDER REGENSDORF SWITZERLAND	XLR CONNECTION ANALOG OUTPUT			1.940.628.81

Connection Board 2xD-15F 8x AESI-Card 1.940.635.00

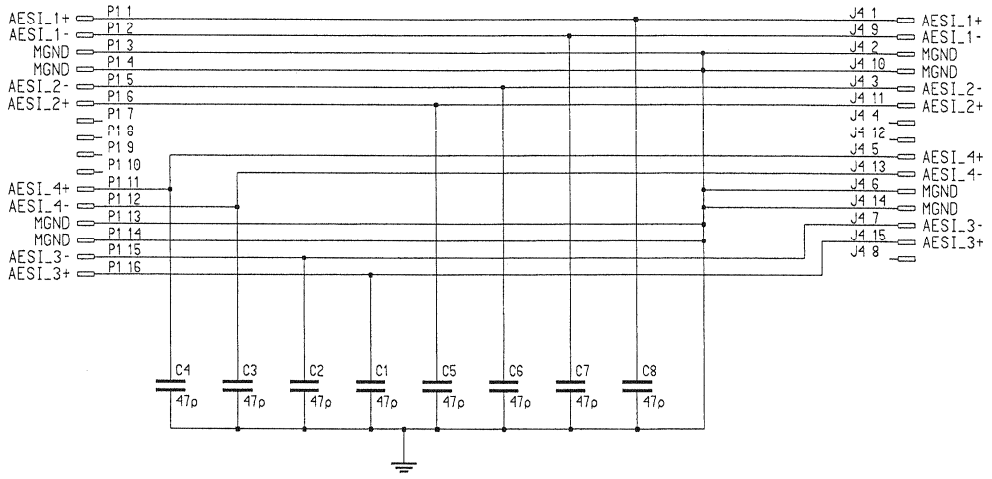

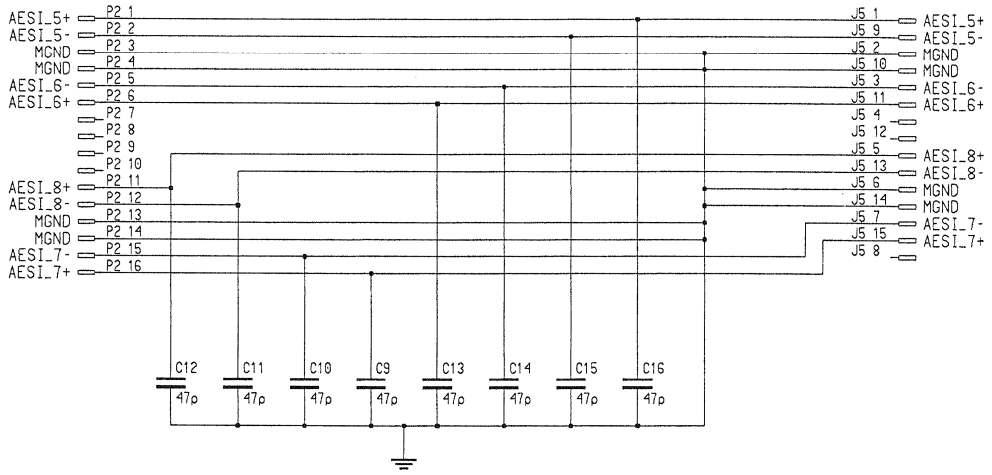

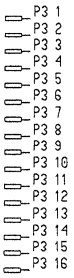

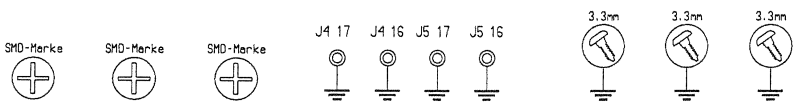

0 18.11.97 JM				
	D950			PAGE 1 OF 1
STUDER	CONNECTION BOARD 2X D-15F 8X AESI-CARD	SC	1.940.635.00	

Connection Board 2xD-15F 8x AESI-Card 1.940.635.00

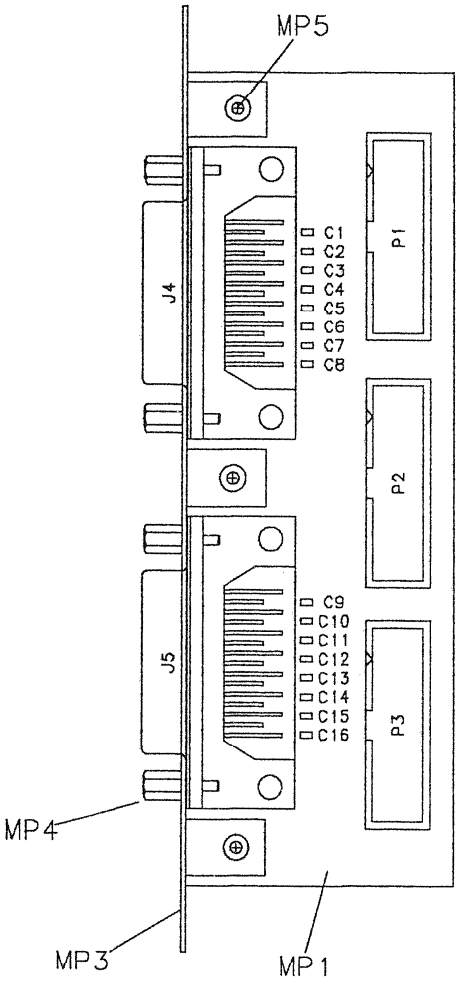

Idx.	Pos.	Part No.	Qty.	Type/Val.	Description
0	C 1	59.60.2241		47p	CER 50V, 5%, C0G, 0603
0	C 2	59.60.2241		47p	CER 50V, 5%, C0G, 0603
0	C 3	59.60.2241		47p	CER 50V, 5%, C0G, 0603
0	C 4	59.60.2241		47p	CER 50V, 5%, C0G, 0603
0	C 5	59.60.2241		47p	CER 50V, 5%, C0G, 0603
0	C 6	59.60.2241		47p	CER 50V, 5%, C0G, 0603
0	C 7	59.60.2241		47p	CER 50V, 5%, C0G, 0603
0	C 8	59.60.2241		47p	CER 50V, 5%, C0G, 0603
0	C 9	59.60.2241		47p	CER 50V, 5%, C0G, 0603
0	C 10	59.60.2241		47p	CER 50V, 5%, C0G, 0603
0	C 11	59.60.2241		47p	CER 50V, 5%, C0G, 0603
0	C 12	59.60.2241		47p	CER 50V, 5%, C0G, 0603
0	C 13	59.60.2241		47p	CER 50V, 5%, C0G, 0603
0	C 14	59.60.2241		47p	CER 50V, 5%, C0G, 0603
0	C 15	59.60.2241		47p	CER 50V, 5%, C0G, 0603
0	C 16	59.60.2241		47p	CER 50V, 5%, C0G, 0603
0	J 4	54.13.0072		15p	D-Sub, PCB, Winkel
0	J 5	54.13.0072		15p	D-Sub, PCB, Winkel
0	MP 1	1.940.635.11	1 pce		Connection 2xD-15F 8xAESI PCB
0	MP 2	1.940.635.04	1 pce		Nr.-Etikette 5 * 20
0	MP 3	1.940.615.01	1 pce		Rückwand D15+D15
0	MP 4	54.13.0081	4 pcs	4.85mm	Bolzen UNC 4-40
0	MP 5	28.31.0005	3 pcs		BLINDNIETE, D 3.2* 6.1
0	P 1	54.14.2002		16p	1/20" Au, gerade, ohne Verrieg
0	P 2	54.14.2002		16p	1/20" Au, gerade, ohne Verrieg
0	P 3	not used		16p	1/20" Au, gerade, ohne Verrieg

End of List

Comments

Modification Aenderung					
	.	.			3
	.	.			2
	.	.			1
Edition Ausgabe	18.11.97	AF			0
	Date Datum	Visa Gez.	Checked Gepr.	Seen Gea.	Index

Copy to: Kopie fuer: .

STUDER REGENSDORF | Description: Benennung: CONNECTION BOARD 2X D-15F 8X AESI-CARD | Number: Nummer: 1.940.635.00

Connection Board 2xD-15M 8x AESO-Card 1.940.636.00

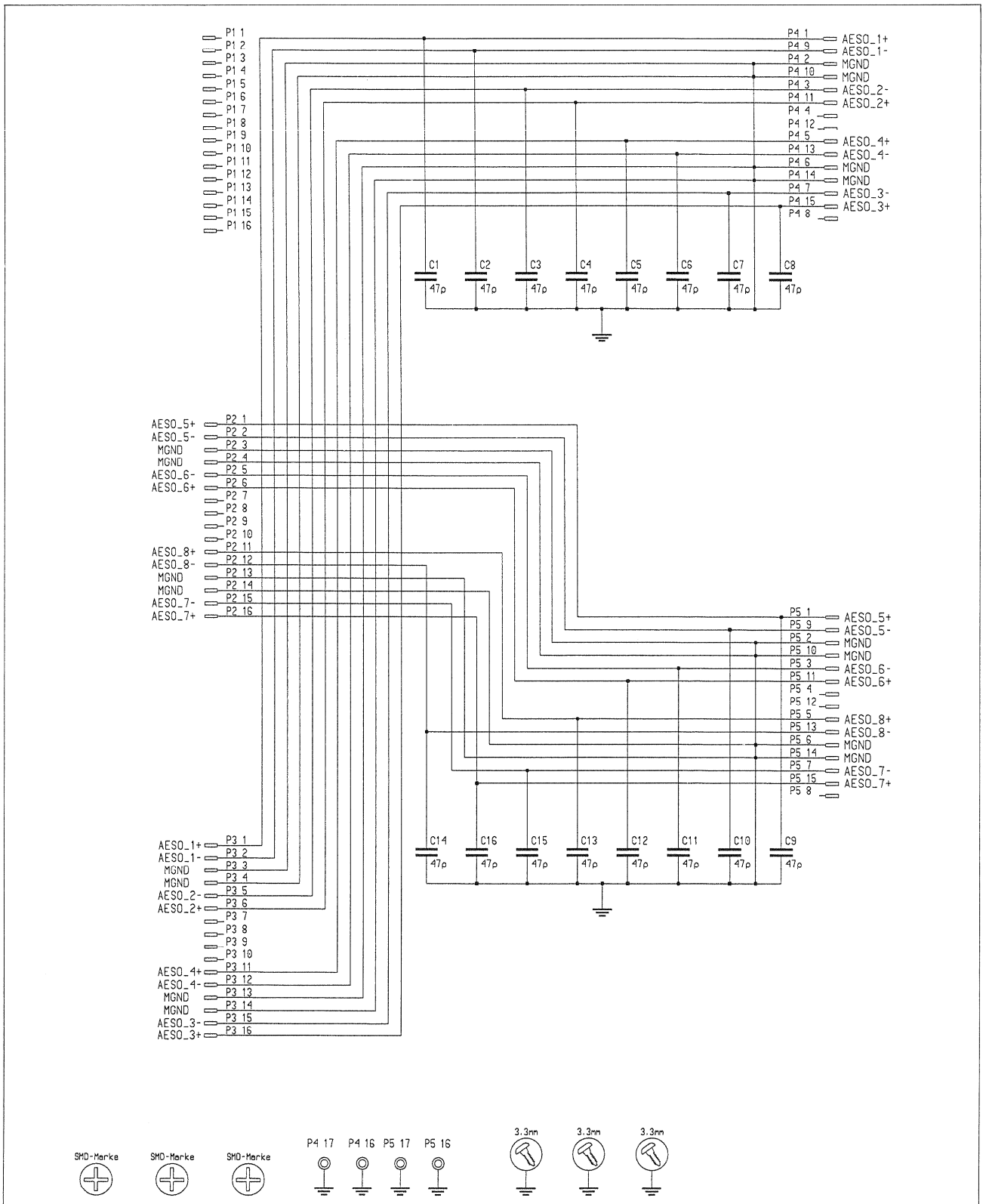

Connection Board 2xD-15M 8x AESO-Card 1.940.636.00

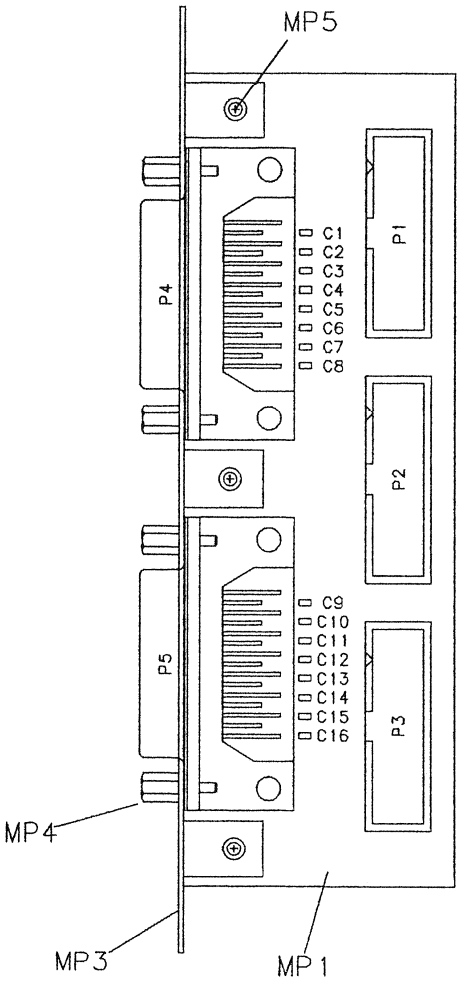

Idx.	Pos.	Part No.	Qty.	Type/Val.	Description
0	C 1	59.60.2241		47p	CER 50V, 5%, C0G, 0603
0	C 2	59.60.2241		47p	CER 50V, 5%, C0G, 0603
0	C 3	59.60.2241		47p	CER 50V, 5%, C0G, 0603
0	C 4	59.60.2241		47p	CER 50V, 5%, C0G, 0603
0	C 5	59.60.2241		47p	CER 50V, 5%, C0G, 0603
0	C 6	59.60.2241		47p	CER 50V, 5%, C0G, 0603
0	C 7	59.60.2241		47p	CER 50V, 5%, C0G, 0603
0	C 8	59.60.2241		47p	CER 50V, 5%, C0G, 0603
0	C 9	59.60.2241		47p	CER 50V, 5%, C0G, 0603
0	C 10	59.60.2241		47p	CER 50V, 5%, C0G, 0603
0	C 11	59.60.2241		47p	CER 50V, 5%, C0G, 0603
0	C 12	59.60.2241		47p	CER 50V, 5%, C0G, 0603
0	C 13	59.60.2241		47p	CER 50V, 5%, C0G, 0603
0	C 14	59.60.2241		47p	CER 50V, 5%, C0G, 0603
0	C 15	59.60.2241		47p	CER 50V, 5%, C0G, 0603
0	C 16	59.60.2241		47p	CER 50V, 5%, C0G, 0603
0	MP 1	1.940.636.11	1 pce		Connection 2xD-15M 8xAESO PCB
0	MP 2	1.940.636.04	1 pce		Nr.-Etikette 5 * 20
0	MP 3	1.940.615.01	1 pce		Rückwand D15+D15
0	MP 4	54.13.0081	4 pcs	4.85mm	Bolzen UNC 4-40
0	MP 5	28.31.0005	3 pcs		BLINDNIETE, D 3.2* 6.1
0	P 1	not used		16p	1/20" Au, gerade, ohne Verrieg
0	P 2	54.14.2002		16p	1/20" Au, gerade, ohne Verrieg
0	P 3	54.14.2002		16p	1/20" Au, gerade, ohne Verrieg
0	P 4	54.13.0077		15p	D-Sub, PCB, Winkel
0	P 5	54.13.0077		15p	D-Sub, PCB, Winkel

End of List

Comments

Modification Aenderung					
	.	.			3
	.	.			2
	.	.			1
Edition Ausgabe	18.11.97	AF			0
	Date Datum	Visa Gez.	Checked Gepr.	Seen Ges.	Index

Copy to: Kopie fuer: .

STUDER REGENSDORF | Description: Benennung: CONNECTION BOARD 2X D-15M 8X AESO-CARD | Number: Nummer: 1.940.636.00

XLR Connection 4x AES / EBU Input 1.940.637.81

PCB:	1.940.617.12	(1x)
C 47pF:	59.34.2470	(8x)
Px:	54.14.2002	(1x)
Wxx:	57.11.3000	(4x)
XLR 3P/F:	54.21.2207	(4x)
FRONT	1.940.617.01	(1x)
SCREWS:	20.24.7623	(8x)

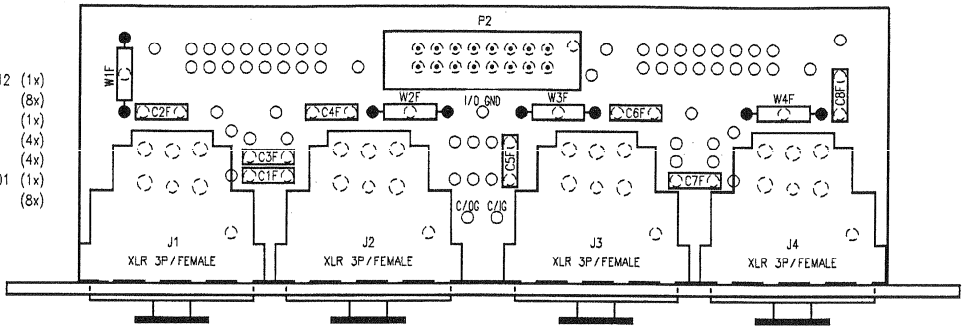

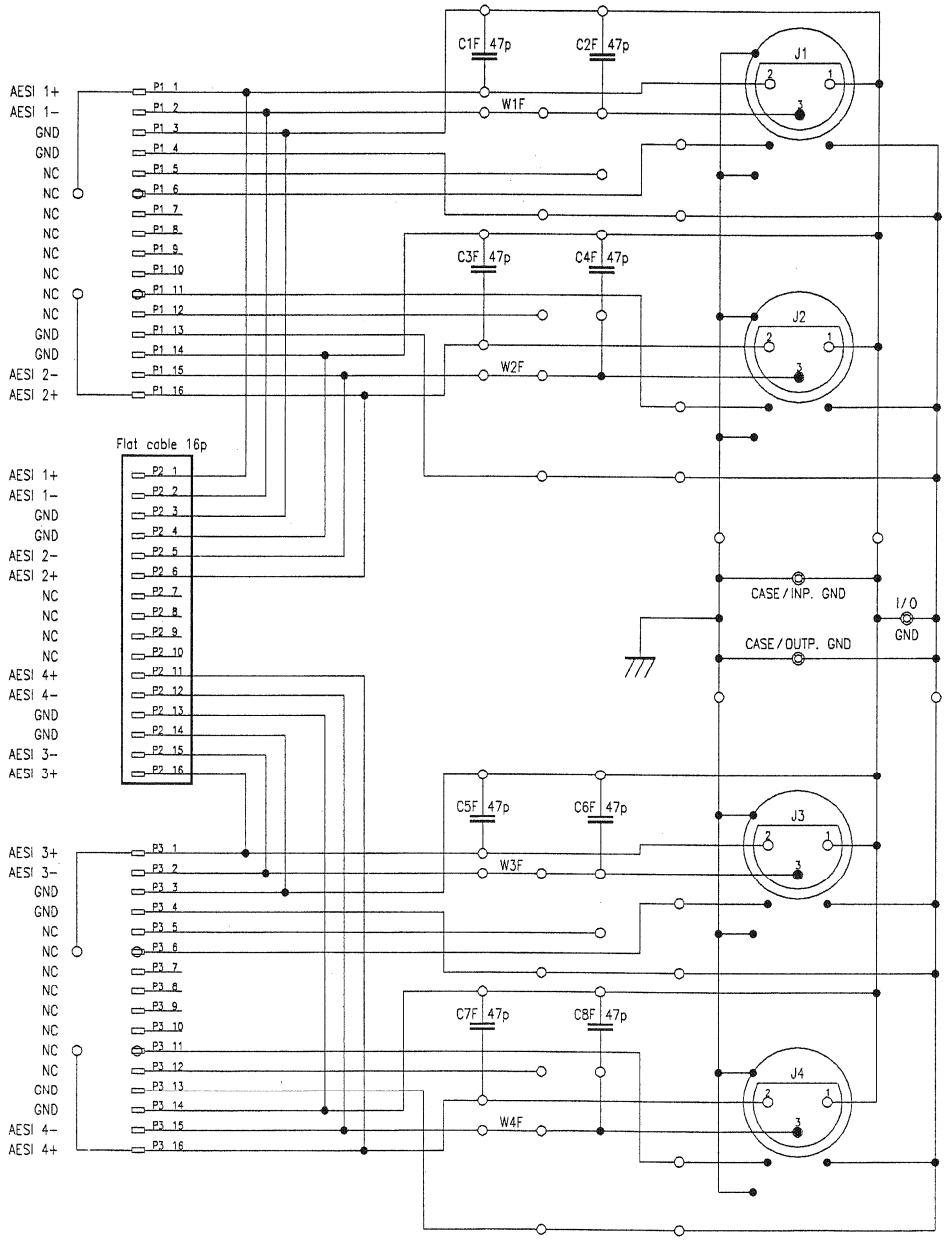

06.01.98/BK		
SC1940637-81		PAGE 1 OF 1
STUDER REGENSDORF SWITZERLAND	XLR CONNECTION 4x AES/EBU INPUT	1.940.637.81

XLR Connection 4x AES / EBU Output 1.940.638.81

PCB:	1.940.617.12	(1x)
C 47pF:	59.34.2470	(8x)
Px:	54.14.2002	(1x)
Wxx:	57.11.3000	(8x)
XLR 3P/M:	54.21.2202	(4x)
FRONT	1.940.617.01	(1x)
SCREWS:	20.24.7623	(8x)

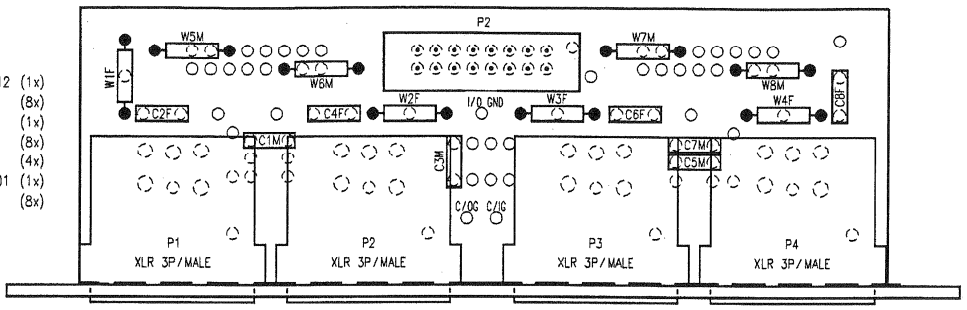

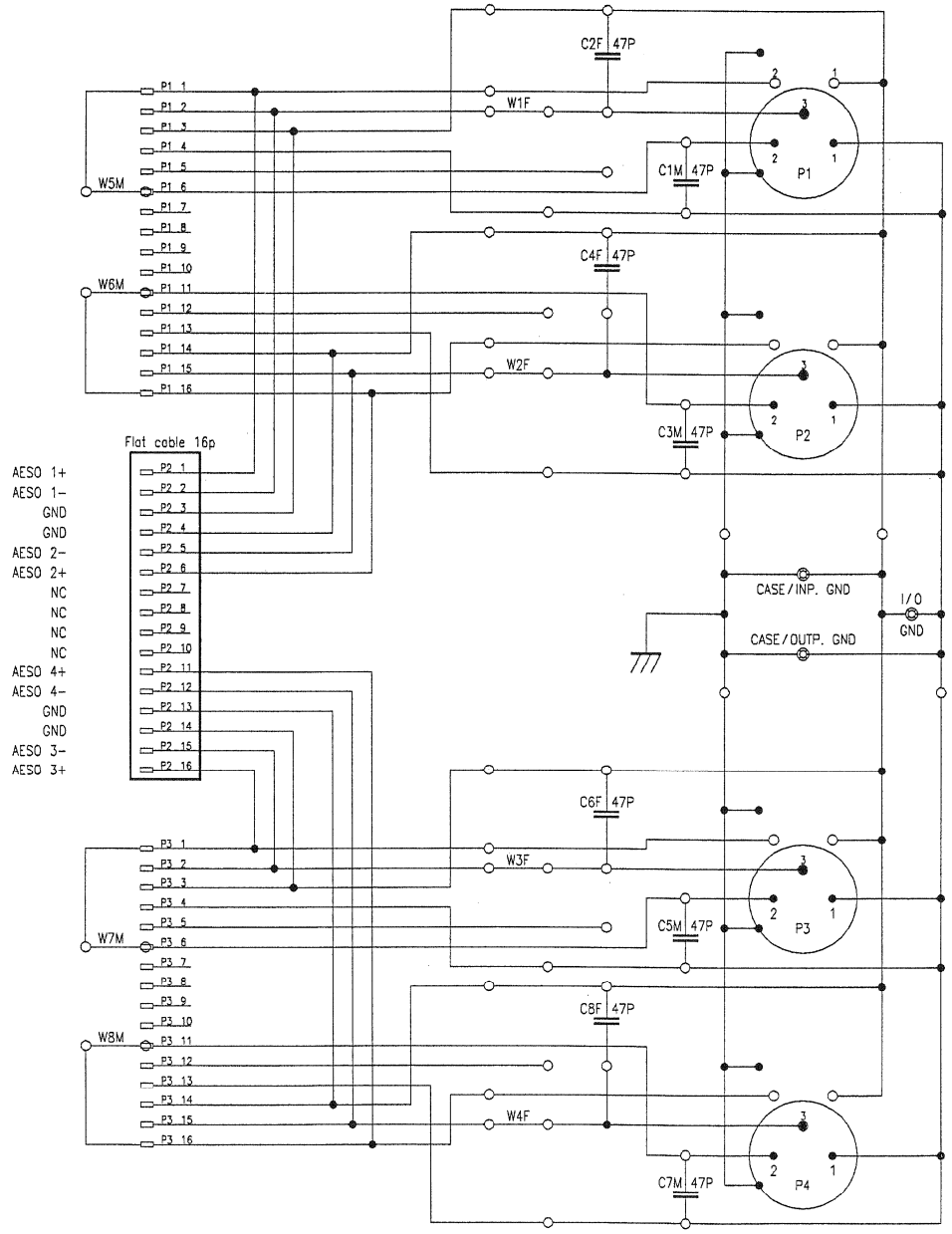

0 06.01.98/BK				
SC1940638-81				PAGE 1 OF 1
STUDER REGENSDORF SWITZERLAND	XLR CONNECTION 4x AES/EBU OUTPUT			1.940.638.81